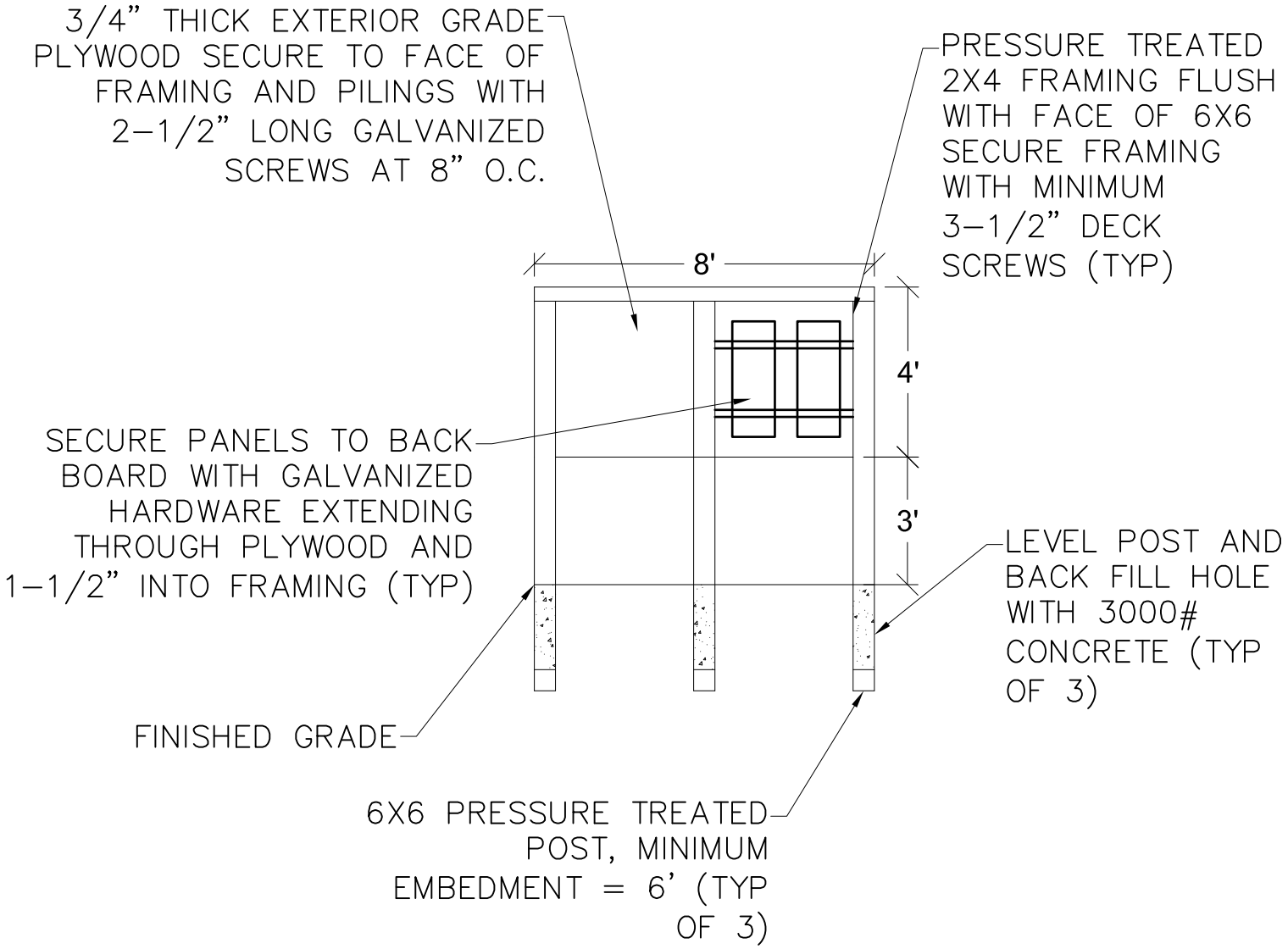

ADDENDUM #1

ELECTRICAL PANEL MOUNTING DETAIL

SCALE: 1/4" = 1'	DRAWN: JAK	APPROVED: RMK
DATE: 08/01/2016	COASTAL JOB NO. : 16-033	

COASTAL ENGINEERING
2406 Princess Anne Road, Virginia Beach, VA 23456
Phone 757-563-9027 Fax 757-563-9028

AD-1

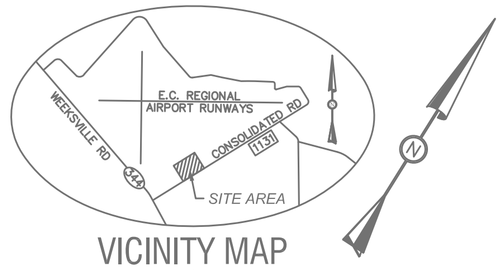

VICINITY MAP
NTS

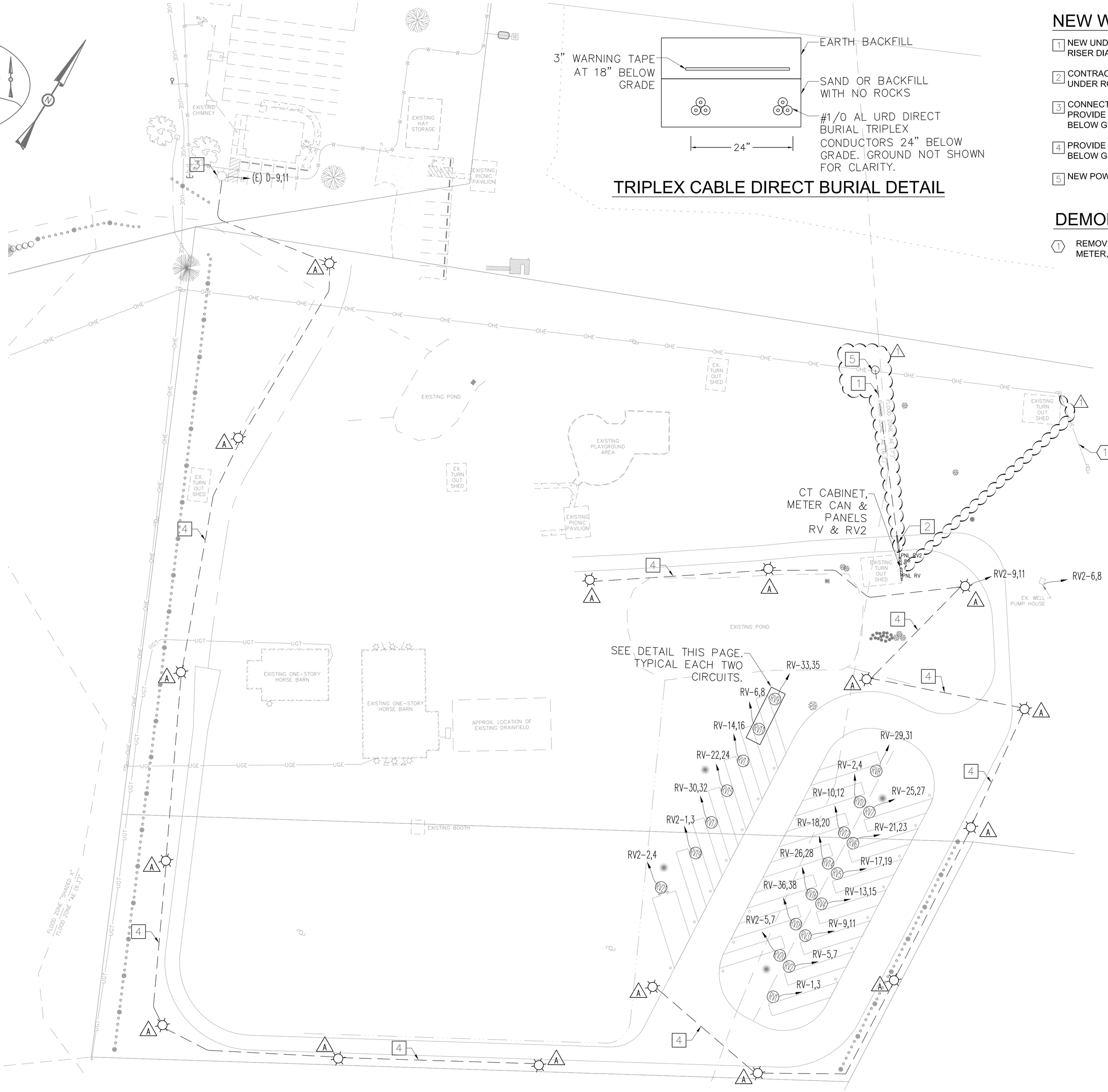

TRIPLEX CABLE DIRECT BURIAL DETAIL

NEW WORK NOTES: (THIS SHEET ONLY)

1. NEW UNDERGROUND SERVICE SECONDARY CABLING BY POWER CO. SEE RISER DIAGRAM SHEET E1.2.
2. CONTRACTOR TO FURNISH AND INSTALL (2) 4" PVC SCH. 40 CONDUITS UNDER ROADWAY MINIMUM 36" BELOW GRADE.
3. CONNECT NEW TYPE A POLE LIGHTS (7EA.) TO EXISTING CIRCUIT NOTED. PROVIDE (2)#6 THHN CU, (1)#10 CU GND IN 1" PVC CONDUIT BURIED 24" BELOW GRADE TO NEW TYPE A LIGHT POLES/FIXTURES.
4. PROVIDE (2)#6 THHN CU, (1)#10 CU GND IN 1" PVC CONDUIT BURIED 24" BELOW GRADE.
5. NEW POWER CO. TRANSFORMER AND POLE.

DEMOLITION WORK NOTES: (THIS SHEET ONLY)

1. REMOVE EXISTING OVERHEAD SERVICE, TEMPORARY POWER POLE, METER, AND PANEL THAT FEEDS WELL PUMP HOUSE.

GRAPHIC SCALE
40 0 20 40 80
(IN FEET)
1 inch = 40 ft.

ELECTRICAL PLAN

SCALE: 1" = 40'-0"

EASTERN CAROLINA ENGINEERING PC
Engineering · Surveying · Construction Management
www.easterncarolinaengineering.com
Phone: 252-335-1888 Fax: 252-331-2390 License: C-4162
154 US Hwy 158 East, Camden, NC 27921

NORTH CAROLINA PROFESSIONAL ENGINEER SEAL 027968 07-07-16 RICHARD M. KLEIN

CURRITUCK RURAL CENTER
RV AND HORSE TRAILER PARKING
184 MILBURN SAWYER RD
POPLAR BRANCH TOWNSHIP / CURRITUCK COUNTY
NORTH CAROLINA

REVISIONS: NUM.	DATE	DESCRIPTION
1	08/02/2016	ADDENDUM#1

Project #: 160026
Drawing #: 8-2-16 ADDENDUM#1 Electrical.dwg
Drawn: BPM
Checked: RMK
Approved: RMK
Date: 7/7/2016
Sheet #: 13/14
Scale: 1" = 40'

SHEET TITLE: ELECTRICAL PLAN
SHEET NUMBER: E1.1