CONTRACT DOCUMENTS

FOR

ALTITUDE VALVE VAULT

for the

COROLLA LIGHT ELEVATED WATER TANK

SOUTHERN OUTER BANKS WATER SYSTEM

Currituck County

Corolla, NC

September 12, 2016

NOTICE TO BIDDERS

Bids will be received until 4:00 pm on October 13, 2016 at the Currituck County Engineer's Office, Currituck County Courthouse, 153 Courthouse Road, Suite 302, Currituck, NC 27929, for the following project:

Altitude Valve Vault
for the
Corolla Light Elevated Water Tank
Southern Outer Banks Water System
Corolla, NC

A pre-bid conference will be held to review the project and allow access to the existing facilities. The **pre-bid conference will be held at 2:00 pm on September 26, 2016** at the Southern Outer Banks WTP, 734 Ocean Trail, Corolla, NC 27927. **Attendance is not mandatory**.

The project includes removing a section of the 8" water main at the water tank site and installing a 10' x 6' valve vault with 8" altitude valve and 8" bypass check valve.

Obtain plans from or direct questions to:

Eric T. Weatherly, PE
Phone (252) 232-6035
Eric.Weatherly@CurrituckCountyNC.gov

This will be an informal bid. Bids will not be publically opened and read aloud. The bids will be evaluated and contract will be awarded in accordance with the statutory requirements. All bidders must meet the licensing requirements under Chapter 87 of the N.C. General Statues. Small Business Entities, Women Owned Businesses and Minority Owned Businesses are encouraged to submit bids. The County reserves the right to reject any and all bids and to accept such bids as appears in its judgment to be in the best interest of the County. The County reserves the right to waive any informality.

INSTRUCTIONS TO BIDDERS

The project includes removing a section of the 8” water main at the water tank site and installing a 10’ x 6’ valve vault with 8” altitude valve and 8” bypass check valve.

NOTES:

- All bidders must meet the licensing requirements under Chapter 87 of the N.C. General Statues.
- Contractor is responsible for visiting site and understanding scope of work.
- The project shall be completed within 120 days of the Notice to Proceed.
- The Contractor awarded the project will be required to:
    - Execute the Independent Contractor Agreement (attached)
    - Execute the E-Verify Statement (attached)
    - Provide a form W-9
    - Provide Certificate of Insurance for general liability and workers’ compensation coverage with Currituck County named as a certificate holder
    - No bonds are required.
- Provide a one (1) year warranty on all work.
- Contractor is responsible for locating all utilities.

Bids will be received until 4:00 pm on October 13, 2016 at the Currituck County Engineer’s Office, Currituck County Courthouse, 153 Courthouse Road, Suite 302, Currituck, NC 27929. ALL BIDS ARE TO BE MARKED “Altitude Valve Vault”.

Any questions, problems or suggestions please contact:

Eric T. Weatherly, PE
Eric.Weatherly@CurrituckCountyNC.gov
Phone: 252-232-6035

BID FORM (page 1 of 2)

ALTITUDE VALVE VAULT

FOR THE COROLLA LIGHT ELEVATED WATER TANK

SOUTHERN OUTER BANKS WATER SYSTEM

The Bidder agrees to perform all the work as shown on the Contract Documents, and to furnish all labor, tools, equipment, transportation and all other incidentals necessary for completion of:

Altitude Valve Vault

In compliance with the Notice to Bidders, Instructions to Bidders, the Contract Documents which include the Independent Contractor's Agreement and the contract drawings and project specifications and all addenda issued to date, all of which are part of this proposal, the undersigned hereby proposes to furnish and install all materials, labor, and equipment called for by, and in strict accordance with, said Contract Documents, for the complete Scope of Work indicated:

Complete Scope of Work:

GRAND TOTAL FOR BID:

Altitude valve vault (turn-key) (Lump Sum) $_____

_____

Write out total dollar amount in words

BID FORM (page 2 of 2)

ALTITUDE VALVE VAULT

FOR THE COROLLA LIGHT ELEVATED WATER TANK

SOUTHERN OUTER BANKS WATER SYSTEM

- The bid amount shall be shown in both words and figures. In case of discrepancy, the amount in words shall govern.
- The above prices shall include labor, materials, overhead, profit, insurance, taxes, site repair, clean-up, etc., to cover the finished work of the several kinds called for.
- The Bidder agrees that this bid shall be valid and may not be withdrawn for a period of 60 calendar days after the scheduled closing time for receiving bids.
- Bids may be submitted by hand delivery, postal or email.

Bidder has examined copies of all the Bidding Documents and of the following Addenda (receipt of all which is hereby acknowledged):

Addendum Date:	Addendum Number:
_____	_____
_____	_____
_____	_____
_____	_____

Respectfully submitted this _____ day of _____, 2016.

_____	_____
Name of Firm	Contractors License No.
_____	_____
Signature	Telephone No.
_____	_____
Printed Name and Title	Fax No.

_____

Address

Contract #
_____

INDEPENDENT CONTRACTOR AGREEMENT

THIS AGREEMENT is made the ___ day of _____, 20__ between the **County of Currituck** (hereinafter "County") and _____ [Contractor], (hereinafter "Contractor").

RECITALS

County is a body corporate and politic of the State of North Carolina with the duties and powers set forth in Chapter 153A of the North Carolina General Statutes.

Contractor represents that it is duly qualified to perform business, and otherwise to transact business in North Carolina.

IT IS THEREFORE AGREED as follows:

1. Scope of Work. Contractor agrees to perform the following services for County: _____ **(here, describe in detail the work to be performed by the contractor including the location of where the work is to be performed,** (hereinafter "the Services").

2. Compensation. Contractor will be paid for its Services by County as follows: _____**[here, specify compensation arrangement including payment method and frequency.]**

3. Contractor's Freedom to Contract. Contractor may employ assistants at its sole expense and discretion as may be necessary to fulfill Contractor's obligations under this Agreement. Contractor agrees that anyone to whom it delegates any or all of the Services called

for by this contract will be competent, qualified and capable of performing the work without any supervision, contact or assistance by County's employees. Any such assistant will be employed only by Contractor, and will not be an employee of the County while performing services under this contract.

4. Expenses. County shall not be liable to Contractor for any expenses which Contractor incurs, nor shall Contractor be liable to County for office help or expenses. Contractor shall have no authority to bind County by any promise or representation, unless specifically authorized by the County Manager in writing to do so.

5. Term. This Agreement may be terminated by either party at any time upon _____ days/months written notice to the other party. Upon the termination of this Agreement, Contractor shall prepare and provide to County a list of all pending unfinished business involving Contractor. Contracted Services under the terms of this agreement shall terminate upon completion of the Services which shall in no event exceed ____ days/months for completion of the Services. If you have a short term contract, 30/60/90 days, the blue section will apply. If you have a term running on a fiscal year, take out the blue and add the term of the contract in this section if you have not already specifically set it out in the scope of services. For example – The term of this contract is July 1, 2015 through June 30, 2016. PLEASE REMOVE.

6. Nature of Relationship. Contractor understands that it is an independent contractor and is not an employee, subcontractor, agent, servant, partner nor joint venturer of County. Contractor understands that it has the right to use its best judgment and efforts to fulfill the terms and obligations of this Agreement. Contractor further understands and acknowledges the following:

a. That it will receive no compensation other than as outlined in this Agreement and is not subject to nor eligible for any benefits which may be offered by County to its employees, such as vacation pay, sick leave, insurance coverage or retirement plan participation.

b. Its Services provided in accordance with this Agreement are an independent calling or occupation.

c. Contractor is expected to use its own skill, judgment and expertise to fulfill the obligations of this Agreement, and is not supervised, directed or controlled by County as to the means or methods it should employ.

d. Contract is not required to perform tasks in any particular order or sequence.

e. Contractor needs no training from County as to how to fulfill its duties and responsibilities.

f. Contractor may determine its own daily schedule and those of its own employees or servants without prior approval of County.

g. Contractor is not required to devote any particular percentage of its time or resources to perform the Services required hereunder.

h. Contractor furnishes its own equipment and supplies and is expected to maintain its business office somewhere other than at the County's office.

i. To the extent Contractor must procure or maintain any insurance, license, certification or trade membership, it must do so at its own cost.

j. This Agreement shall not prevent Contractor from performing other services for other parties. Contractor may engage in other business endeavors or projects of any kind or nature.

7. Taxes. Contractor assumes exclusive liability for payment of all federal, state or other governmental division taxes and contributions for social security, Medicare/Medicaid, etc., now or hereafter required, incurred or assessed by law. Contractors providing equipment, materials, parts or supplies shall provide a breakdown of labor, materials, parts or supplies and sales tax by County or a sales tax report approved by the County Finance Department with the invoice. Contractor agrees to indemnify and hold harmless the County from any claims for taxes as described in this Section.

8. Insurance. Contractor understands and agrees that neither it nor its employees are subject to workers' compensation or general liability coverage maintained by the County for its employees. Contractor agrees to procure and maintain workers' compensation insurance coverage for the benefit of contractor's employees or subcontractors and to procure general liability insurance listing the County as an additional insured at all times relevant to this Agreement. Contractor shall provide to County a valid and current certificate of workers' compensation and general liability insurance listing the County of Currituck as an additional insured. In the event Contractor shall fail at any time to have in force and effect insurance as required by this Section, Contractor agrees to indemnify and hold harmless County for (1) any premium paid by County to maintain insurance coverage applicable to Contractor and/or its employees or subcontractors; (2) any worker's compensation benefits paid by County as a result of Contractor's failure to comply with this Section; and (3) any amounts paid by County for general liability claims as a result of Contractor's failure to comply with this Section.

If the contractor has less than three (3) employees and is not required to provide Worker’s Compensation by the State of North Carolina initial here: _____

Independent Contractor carries and will provide County with a Certificate of Insurance for:

Workers' Compensation _____ Yes _____ No

General Liability _____ Yes _____ No

9. Indemnity. Contractor shall and does hereby agree to indemnify, save harmless and defend County from the payment of any sum or sums of money to any person whomsoever on account of claims or suits growing out of injuries to persons, including death, or damage to property caused by Contractor, its employees, agents or subcontractors in any way attributable to the performance of the Services, including (but without limiting the generality of the foregoing), all claims for service, labor performed, materials furnished, provisions and supplies, injuries to person or damage to property, liens, garnishments, attachments, claims, suits, costs, attorneys' fees, costs of investigation and of defense. It is the intention of this paragraph to hold the Contractor responsible for the payment of any and all claims, suits, or liens, of any nature and character, in any way attributable to or asserted against County or against Contractor and County, or which the County may be required to pay. In the event the liability of the Contractor shall arise by reason of the sole negligence of County and/or the sole negligence of County's employees, agents or servants, then and only then, Contractor shall not be liable under the provisions of this paragraph.

10. Arbitration. Any controversy or claim arising out of, or relating to this Agreement, or its breach, shall be settled by arbitration in Currituck County, North Carolina in accordance with the provisions of the North Carolina Revised Uniform Arbitration Act, (the "Act"). The parties to this Agreement understand that this arbitration provision shall expressly apply to this Agreement in accordance with the Act. Judgment upon the award rendered may be entered and enforced in any court of competent jurisdiction.

11. E-Verify. Contractor shall comply with the requirements of Article 2 of Chapter 64 of the North Carolina General Statutes. Further, if Contractor utilizes a subcontractor, Contractor shall require the subcontractor to comply with the requirements of Article 2 of Chapter 64 of the North Carolina General Statutes.

12. Iran Divestment. Contractor certifies that, as of the date listed above, it is not on the Final Divestment List as created by the State Treasurer pursuant to N.C.G.S. §147-86.58. In compliance with the requirements of the Iran Divestment Act and N.C.G.S. §147-86.58, Contractor shall not utilize in the performance of the contract any subcontractor that is identified on the Final Divestment List. The undersigned hereby certifies that he or she is authorized by the vendor or bidder listed above to make the foregoing statement.

13. Notices. Any notice, request or report given by one party to the other shall be in writing, deposited in the United States Mail (postage prepaid) or hand delivered and properly addressed as follows:

If the notice is to County:

_____
_____
_____

(Or such other person or address as County shall have designated by due notice to Contractor).

If the notice is to Contractor:

_____
_____
_____

(Or such other person or address as Contractor shall have designated by due notice to County).

14. Non-Waiver. Nothing set forth herein is intended nor shall be construed as a waiver of any immunity available to County, its governing board or employees.

15. Headings. The headings, subheadings and captions in this Agreement and in any exhibit hereto are for reference purposes only and shall not affect the meaning or interpretation of this Agreement.

16. Amendments. This Agreement may not be amended except by written instrument duly executed by or on behalf of all of the parties hereto.

17. Complete Agreement. This Agreement constitutes the entire Agreement between County and Contractor pertaining to its subject matter and supersedes all prior and contemporaneous negotiations, agreements and understandings of either or both parties in connection therewith.

18. Governing Law. The validity, interpretation and performance of this Agreement and of its provisions shall be governed by the laws of the State of North Carolina.

The undersigned have read the entire Agreement and accept the terms and conditions as shown by their signatures below.

MUST INCLUDE ATTEST LINE

ATTEST:

By:_____
Clerk to the Board of Commissioners

COUNTY OF CURRITUCK

By: _____(SEAL)

CUT AND PASTE THE APPLICABLE SIGNATURE LINE FROM LAST PAGE IN THIS SPACE

This instrument has been preaudited in the manner
required by the Local Government Budget and Fiscal Control Act.

_____
Sandra Hill
Finance Officer

CUT AND PASTE APPROPRIATE SIGNATURE LINES INTO THE CONTRACT – DO NOT ATTACH THIS PAGE TO THE CONTRACT

If Sole Proprietor or Independent Contractor – use this signature line

CONTRACTOR

By: _____(SEAL)
John Doe

If Corporation – use this signature line
You can verify the corporation name by going to http://www.secretary.state.nc.us/corporations/ and doing a corporation name search

Attest:

By:_____
Mary Doe, Secretary
or
Vice President/Secretary/Treasurer

(Affix Corporate Seal)

NAME OF CORPORATION

By:_____(SEAL)
John Doe, President

If a LLC or a PLLC(Limited Liability Company) – use this signature line
You can verify the company name by using the same Secretary of State website as above

NAME OF LLC

By:_____(SEAL)

County of Currituck E-Verify Affidavit

STATE OF NORTH CAROLINA

AFFIDAVIT:

COUNTY OF CURRITUCK E-VERIFY COMPLIANCE

****

I, _____(the individual attesting below), being duly authorized by and on behalf of _____ (the entity bidding on project hereinafter "Employer") after first being duly sworn hereby swears or affirms as follows:

1. Employer understands that E-Verify is the federal E-Verify program operated by the United States Department of Homeland Security and other federal agencies, or any successor or equivalent program used to verify the work authorization of newly hired employees pursuant to federal law in accordance with NCGS §64-25(5).

2. Employer understands that Employers Must Use E-Verify. Each employer, after hiring an employee to work in the United States, shall verify the work authorization of the employee through E-Verify in accordance with NCGS§64-26(a).

3. Employer is a person, business entity, or other organization that transacts business in this State and that employs 25 or more employees in this State. (mark Yes or No)

a. YES _____, or

b. NO _____

4. Employer's subcontractors comply with E-Verify, and if Employer is the winning bidder on this project, Employer will ensure compliance by providing the County with an E-Verify Compliance Affidavit for any subcontractors current or subsequently hired by Employer.

This ____ day of _____, 20_____.

Signature of Affiant: _____

Print or Type Name: _____
Contractor: _____
State of _____ County of _____
Signed and sworn to (or affirmed) before me, this the _____ day of _____, 20__.

_____
Notary Public
My Commission Expires:

_____(Affix Official/Notarial Seal)

Construction Notes

1. **Altitude Valve Vault**

- Altitude valve shall be 8” single acting Ross Model 30 AWR valve or pre-approved equal
- All piping inside the vault shall be 8” ductile iron, AWWA C151 latest revision for 200 psi pressures. All piping outside the vault shall be PVC AWWA C900, DR 18, and Class 150.
- Fittings shall be ductile iron Class 350 in accordance with AWWA C-153.
- Mechanical joint fittings shall be used outside the vault with owner approved restraint mechanisms and flanged fittings shall be used inside the vault.
- Gate valves shall be resilient seated wedge type per AWWA C-509. Gate valves inside the vault shall have hand wheel operators. Gate valves outside the vault shall have operating nuts with valve box and 24” concrete donut.
- Check valve shall be swing disc, externally weighted, iron body conforming to AWWA C-508.
- The valve vault piping shall be pressure tested to 150 psi for two-hour duration and shall not drop more than 5 psi. All new work shall be disinfected in accordance to AWWA C-651.
- The vault shall be pre-cast concrete with inside dimensions of 10’ x 6’ x 5’ deep.
- The vault shall have a 12” x 12” recessed sump pump pit. The sump pump is not required.
- Vault shall be installed on a mechanically compacted soil base with 8” of compacted ABC stone.
- Provide 4” PVC Schedule 40 screened vent on top of the vault.
- The access door shall be 4’ x 3’ aluminum with ¼” diamond-pattern cover with stainless steel latch and hinges. Door shall be Bilco Type J or approved equal.

2. **Site Work**

- Call NC One Call service at 1-800-632-4949 not less than three working days before performing work. It is the contractor’s responsibility to avoid existing utility conflicts.
- Protect structures, utilities, sidewalks, pavements, trees and other facilities from damage caused by construction activities. No trees shall be removed. Some limbs may be removed if owner approval is given.
- Site shall be left level, free of debris and hand raked clean.
- Seed all disturbed areas with tall fescue at a rate of 100 lb/acre.

3. General

- The tank site for the altitude valve vault is located at 1099 Ocean Trail, Corolla, NC 27927. A location map is attached. The contractor shall visit the site prior to bidding to determine the extent of the work. Lack of knowledge of existing conditions will not be considered a basis for change orders. This will include a satisfactory effort by the contractor to field verify proper fit. Expense incurred by the contractor, which could have been avoided by this step shall not be a basis for change order.
- Contractor shall furnish and install all equipment and materials for a complete installation in all respects, ready for intended use and in strict accordance with state and local codes and manufacturer's recommendations.
- In addition to manufacturer's standard warranties, Contractor shall furnish written guarantee stating that the work executed under this project shall be free from defects of material and workmanship for a period of 12 months from date of final acceptance.
- Submit data on all pipe, fittings, valves, accessories and vault for owner approval prior to installation.

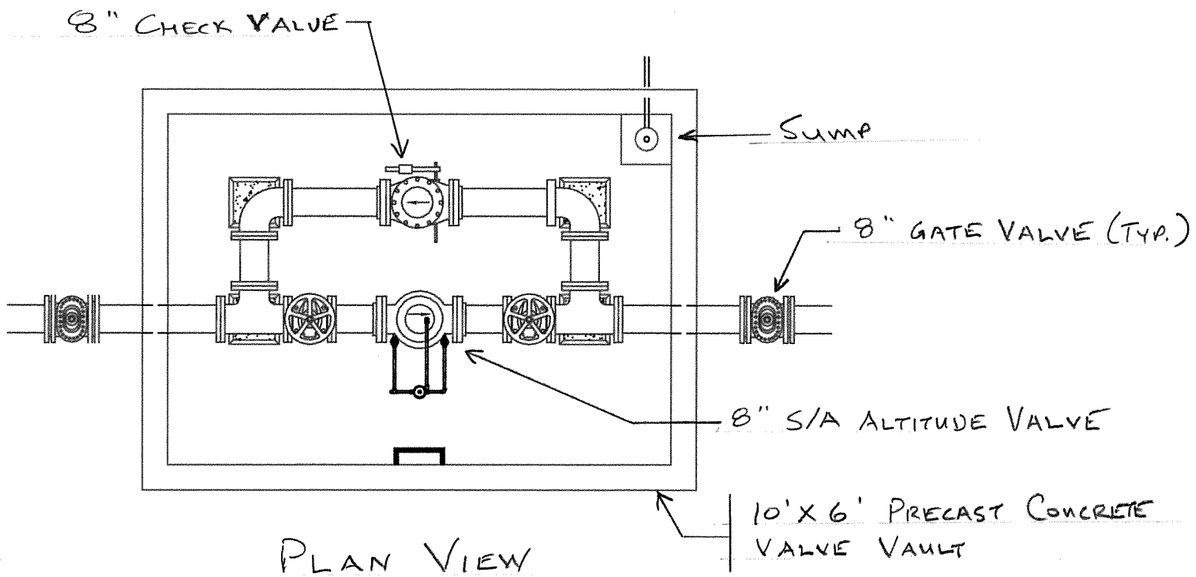

PLAN VIEW

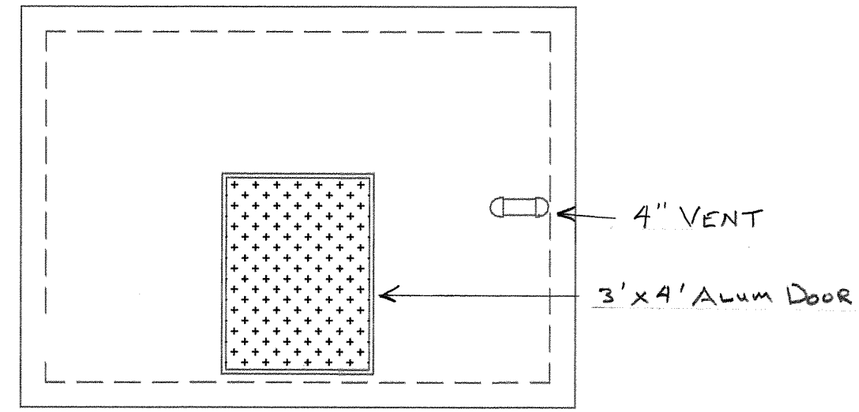

TOP VIEW

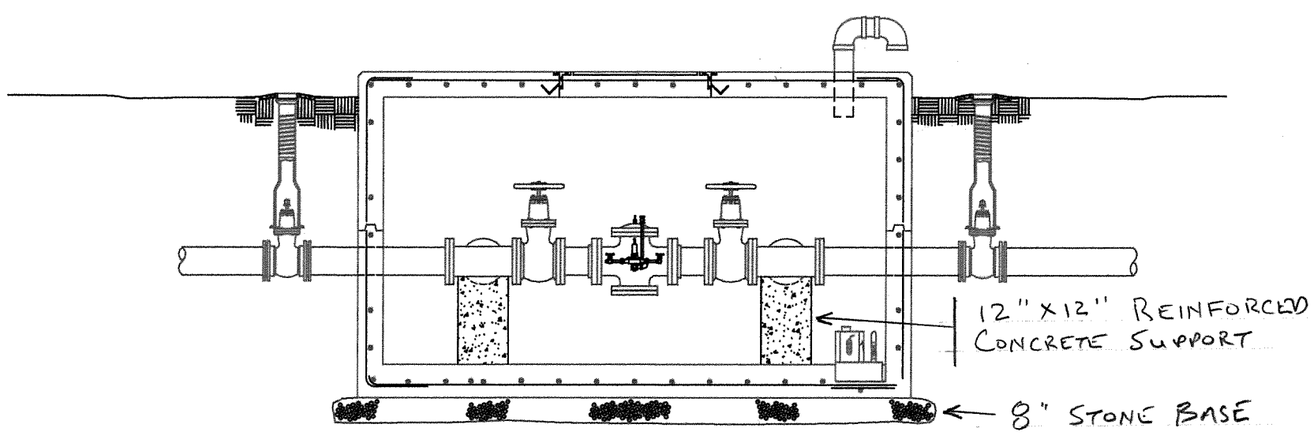

SECTION VIEW

8" ALTITUDE VALVE VAULT

N.T.S.

Proposed Altitude Valve Vault Site Plan

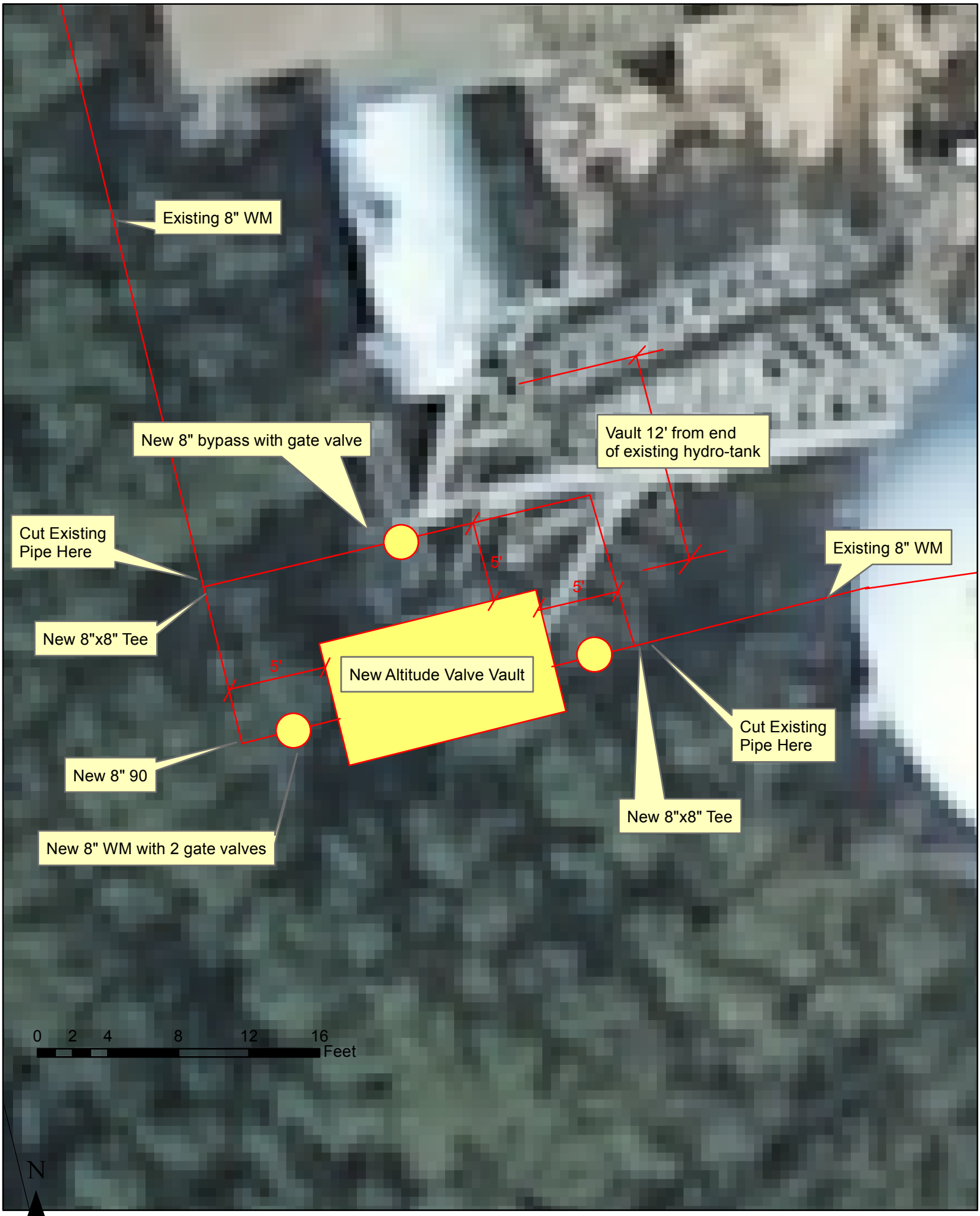

Proposed Altitude Valve Vault Piping Plan