CIVIL LEGEND

EXISTING		NEW
○	MANHOLE	●
□	SANITARY CLEANOUT	■
⊗	VALVE	⊕
□	WATER METER	●
⊻	FIRE HYDRANT	⊻
△	WELL	
⊜ ▤	DROP INLET	▤ ⊜
▣	CURB INLET	▣
□	GAS METER	
○	POWER POLE	
☼	LIGHT POLE	✱
⊠	LIGHT POLE /CONCRETE BASE	
⊠	PEDESTAL	
═══	CURB AND GUTTER	═══
—x—x—	FENCE	—x—x—
═══	PROPERTY LINE	═══
▭	BUILDINGS	▭
ST	STORM SEWER	ST
SS	SANITARY SEWER	SS
W	WATER	W
E	ELECTRIC & TELEPHONE LINE	
□	TRAFFIC BOX	
⊻	SIGN	⊻
○	TREE	
○	BUSH	
▨	PAVEMENT	▬
CONC	CONCRETE	▬
⊕	TEMPORARY BENCHMARK (TBM)	⊕
✱ 10.00	ELEVATIONS	10.0
TC 10.50 / BC 10.00	TOP OF CURB ELEVATIONS	TC 10.50 / 10.00
	TOP OF WALK ELEVATIONS	TW 10.50 / 10.00
—X—X—	SILT FENCE	—X—X—
UNLESS NOTED OTHERWISE		UNO

COUNTRYSIDE ESTATES

MOYOCK TOWNSHIP, CURRITUCK COUNTY, NORTH CAROLINA

CONSTRUCTION DRAWINGS

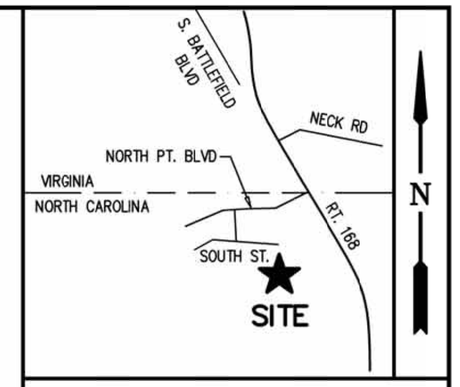

LOCATION MAP – SCALE: 1" = 2,000'

SITE DATA

SITE AREA: 55.67 AC

DISTURBED AREA: PHASE 1 = 1,051,313 SF = 24.13 AC
PHASE 2 = 988,075 SF = 22.68 AC
TOTAL = 2,039,388 SF = 46.82 AC

TOTAL OPEN SPACE: 867,371 SF = 19.91 AC

TOTAL AREA OF ALL LOTS: 1,277,695 SF = 29.33 AC

BUILDING SETBACKS:
FRONT AND CORNER SIDE SETBACK = 20 FEET
SIDE SETBACK = 10.5 FEET*
(*FIRE FLOW BUILDING SEPARATION REQUIREMENT)
REAR SETBACK = 25 FEET

STREET CONNECTIVITY INDEX: 10 LINKS / 9 NODES = 1.1

ZONING: C–MXR – CONDITIONAL MIXED RESIDENTIAL

PROPOSED USE: SINGLE–FAMILY RESIDENTIAL
62 SINGLE–FAMILY HOMES

TAX MAP: PARCEL ID 0009000079B0000

SITE ADDRESS: 166 CARATOKE HIGHWAY
MOYOCK, NORTH CAROLINA 23502

REQUIRED FIRE FLOW 750 GPM

ANTICIPATED SEWAGE FLOW:
62 SF UNITS X 4 BEDROOMS X 120 GPD/BEDROOM
= 29,760 GPD = 20.7 GPM

ANTICIPATED WATER DEMAND:
62 SF RESIDENTIAL UNITS X 480 GPD/UNIT
= 29,760 GPD = 20.7 GPM

6.9 ACRES COMMERCIAL X 880 GPD/ACRE
= 6,072 GPD = 4.2 GPM

TOTAL = 24.9 GPM

PEAK HOURLY (2.5 PEAK FACTOR) = 89,580 GPD = 62.2 GPM
MAXIMUM DAY (1.5 PEAK FACTOR) = 53,748 GPD = 37.3 GPM

PROJECT DATA

CIVIL DESIGNER: MSA, P.C.
5033 ROUSE DRIVE
VIRGINIA BEACH, VA 23462
PHONE: (757) 490–9264
FAX: (757) 490–0634

CURRENT LAND OWNERS: COUNTRYSIDE ESTATES, LLC
SOURCE DEED: 1349, PAGE: 7
1492 SOUTH INDEPENDENCE BLVD.
VIRGINIA BEACH, VIRGINIA 23462

DEVELOPER: NCBC, LLC, A VIRGINIA LIMITED LIABILITY CO.
1492 SOUTH INDEPENDENCE ROAD
VIRGINIA BEACH, VIRGINIA 23462
(757) 474–0888
JOHN NAPOLITANO
jnapolitano@napolitanohomes.com

SHEET INDEX

C1.1	COVER SHEET	C7.1	NOTES AND DETAILS
C1.2	SHEET KEY	C7.2	NOTES AND DETAILS
C1.3	PHASING PLAN	C7.3	NOTES AND DETAILS
C2.1	TOPOGRAPHIC SURVEY / EXISTING CONDITIONS PLAN	C7.4	NOTES AND DETAILS
C2.2	TOPOGRAPHIC SURVEY / EXISTING CONDITIONS PLAN	C7.5	PUMP STATION NOTES AND DETAILS
C2.3	TOPOGRAPHIC SURVEY / EXISTING CONDITIONS PLAN	L1.1	LANDSCAPE PLAN
C2.4	TOPOGRAPHIC SURVEY / EXISTING CONDITIONS PLAN	L1.2	LANDSCAPE PLAN
C3.1	DEMOLITION, EROSION & SEDIMENT CONTROL PLAN	L1.3	LANDSCAPE PLAN
C3.2	DEMOLITION, EROSION & SEDIMENT CONTROL PLAN	L2.1	LANDSCAPE NOTES & DETAILS
C3.3	DEMOLITION, EROSION & SEDIMENT CONTROL PLAN	D1.1	EXISTING DRAINAGE AREA MAP
C3.4	DEMOLITION, EROSION & SEDIMENT CONTROL PLAN	D1.2	EXISTING DRAINAGE AREA MAP
C4.1	LAYOUT AND UTILITY PLAN	D1.3	EXISTING DRAINAGE AREA MAP
C4.2	LAYOUT AND UTILITY PLAN	D2.1	PROPOSED DRAINAGE AREA MAP
C4.3	LAYOUT AND UTILITY PLAN	D2.2	PROPOSED DRAINAGE AREA MAP
C4.4	LAYOUT AND UTILITY PLAN	D2.3	PROPOSED DRAINAGE AREA MAP
C5.1	GRADING, DRAINAGE, AND EROSION & SEDIMENT CONTROL PLAN		
C5.2	GRADING, DRAINAGE, AND EROSION & SEDIMENT CONTROL PLAN		
C5.3	GRADING, DRAINAGE, AND EROSION & SEDIMENT CONTROL PLAN		
C5.4	GRADING, DRAINAGE, AND EROSION & SEDIMENT CONTROL PLAN		
C5.5	ENLARGED BMP PLAN		
C5.6	ENLARGED BMP PLAN		
C6.1	ROADWAY PLAN & PROFILE VIEWS		
C6.2	ROADWAY PLAN & PROFILE VIEWS		
C6.3	ROADWAY PLAN & PROFILE VIEWS		
C6.4	ROADWAY PLAN & PROFILE VIEWS		
C6.5	ROADWAY PLAN & PROFILE VIEWS		
C6.6	ROADWAY PLAN & PROFILE VIEWS		
C6.7	ROADWAY PLAN & PROFILE VIEWS		

MSA, P.C.
Environmental Sciences • Planning • Surveying
Civil & Environmental Engineering • Landscape Architecture
5033 Rouse Drive, Virginia Beach, VA 23462
757-490-9264 (Ofc) 757-490-0634 (Fax)
www.msaonline.com

THIS DOCUMENT IS THE SOLE PROPERTY OF MSA, P.C. VIRGINIA BEACH, VIRGINIA. THE REPRODUCTION IN WHOLE OR PART, THE MODIFICATION OF ANY DETAIL OR DESIGN, OR USE FOR ANY PURPOSE OTHER THAN THAT INTENDED BY MSA, P.C. MAY NOT BE MADE WITHOUT THE EXPRESSED WRITTEN CONSENT OF MSA, P.C.

NORTH CAROLINA PROFESSIONAL ENGINEER SEAL 031728 09/22/16 SCOTT

PLAN STATUS

DATE	INITIAL	DESCRIPTION
05/19/16	CSA	SWM Permit and E&S Control Plan Submittal
05/19/16	CSA	State Water Supply System Plan Approval Submittal
08/19/16	CSA	E&S Control Plan 2nd Submittal
09/22/16	CSA	Final TRC Submittal

COUNTRYSIDE ESTATES

C1.1

1 of 43 Sheets

PROJ. NO.: 15021

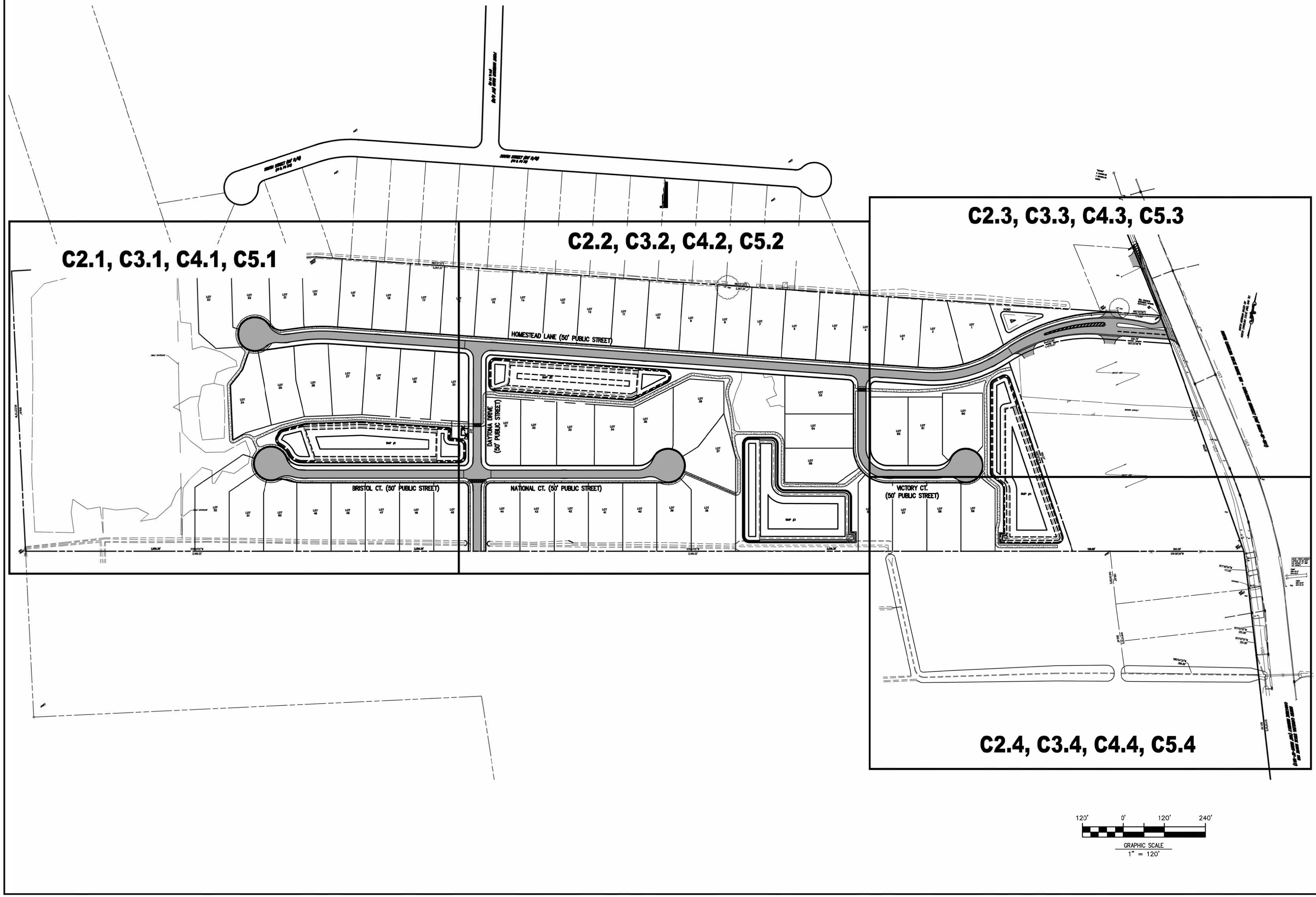

MSA, P.C.
Environmental Sciences • Planning • Surveying
Civil & Environmental Engineering • Landscape Architecture
5033 Rouse Drive, Virginia Beach, VA 23462
757-490-9264 (Ofc) 757-490-0634 (Fax)
www.msaonline.com

NORTH CAROLINA PROFESSIONAL ENGINEER SEAL 031728 09/22/16 C. SCOTT ARCHER

DESIGNED	CJL
DRAWN	CJL
CHECKED	CSA
APPROVED	CSA
DATE	09/22/16

REV. NO.	REV. BY	REVISION DESCRIPTION	REVISION DATE

THIS DOCUMENT IS THE SOLE PROPERTY OF MSA, P.C., VIRGINIA BEACH, VA. THE REPRODUCTION OF ANY DETAIL OR DESIGN OR USE FOR ANY PURPOSE OTHER THAN THAT INTENDED BY MSA, P.C. MAY NOT BE MADE WITHOUT THE EXPRESS WRITTEN CONSENT OF MSA, P.C.

SHEET KEY
of
COUNTRYSIDE ESTATES SINGLE-FAMILY SUBDIVISION
GPIN 8022-39-7183
(MB 21, PG 85, CHES., VA)
MOYOCK TOWNSHIP
CURRITUCK COUNTY, NC

SHEET
C1.2
2 of 43 Sheets

SCALE: 1"=120'

PROJ. NO.: 15021

MSA, P.C.
Environmental Sciences • Planning • Surveying
Civil & Environmental Engineering • Landscape Architecture
5033 Rouse Drive, Virginia Beach, VA 23462
757-490-9264 (Ofc) 757-490-0634 (Fax)
www.msaonline.com

SEAL 031728 — NORTH CAROLINA PROFESSIONAL ENGINEER — C. SCOTT ACEY — 09/22/16

DATE	09/22/16
APPROVED	CSA
CHECKED	CSA
DRAWN	CJL
DESIGNED	CJL

REV. NO.	REV. BY	REVISION DESCRIPTION	REVISION DATE

THIS DOCUMENT IS THE SOLE PROPERTY OF MSA, P.C. VIRGINIA BEACH, VA. THE MODIFICATION OF ANY DETAIL OR DESIGN OR USE FOR ANY PURPOSE OTHER THAN THAT INTENDED BY MSA, P.C. MAY NOT BE MADE WITHOUT THE EXPRESS WRITTEN CONSENT OF MSA, P.C.

PHASING PLAN
of
COUNTRYSIDE ESTATES SINGLE-FAMILY SUBDIVISION
GPIN 8022-39-7183
(MB 21, PG 85, CHES., VA)

MOYOCK TOWNSHIP — CURRITUCK COUNTY, NC

SHEET C1.3 — 3 of 43 Sheets
SCALE: 1"=30'
PROJ. NO.: 15021

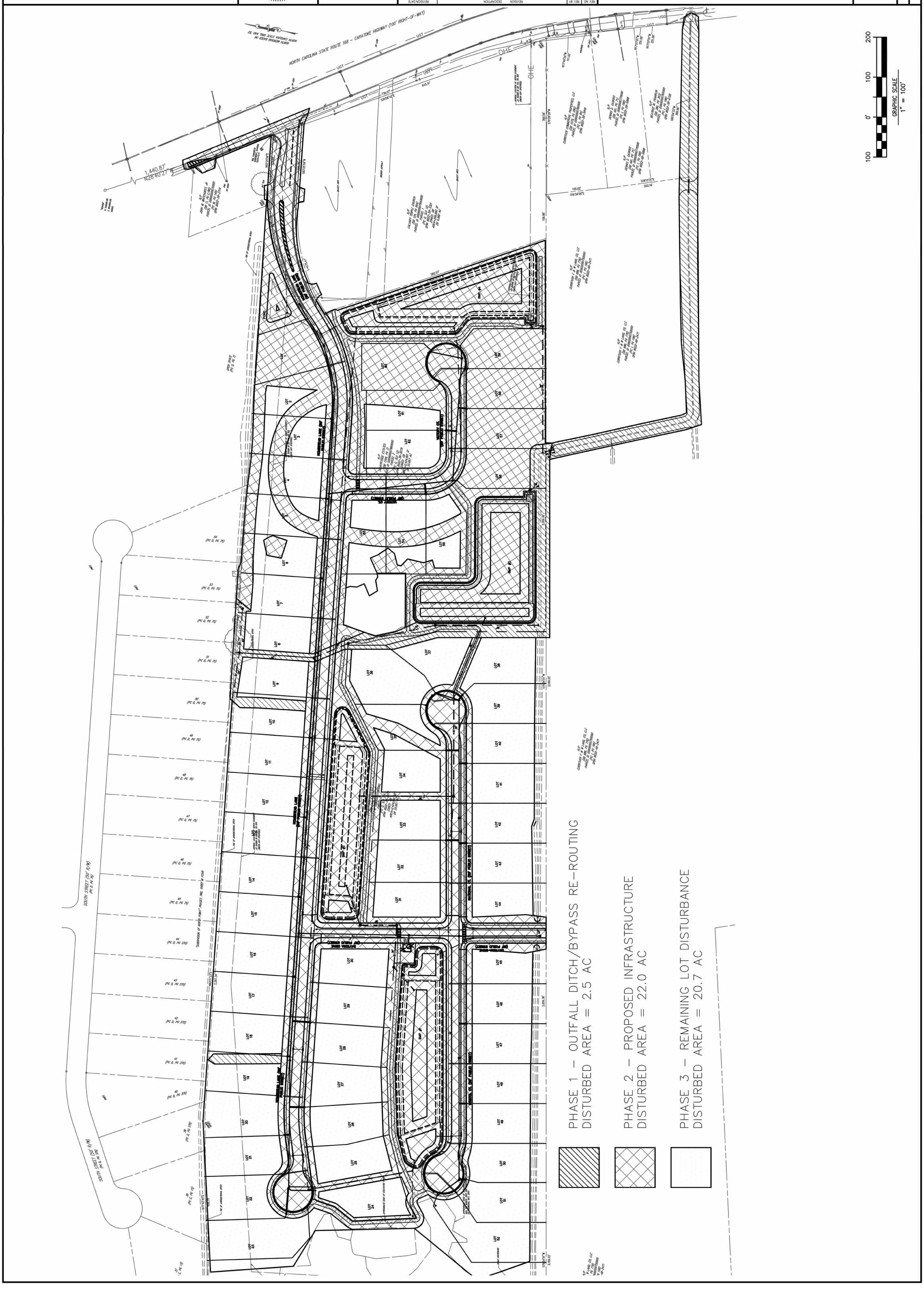

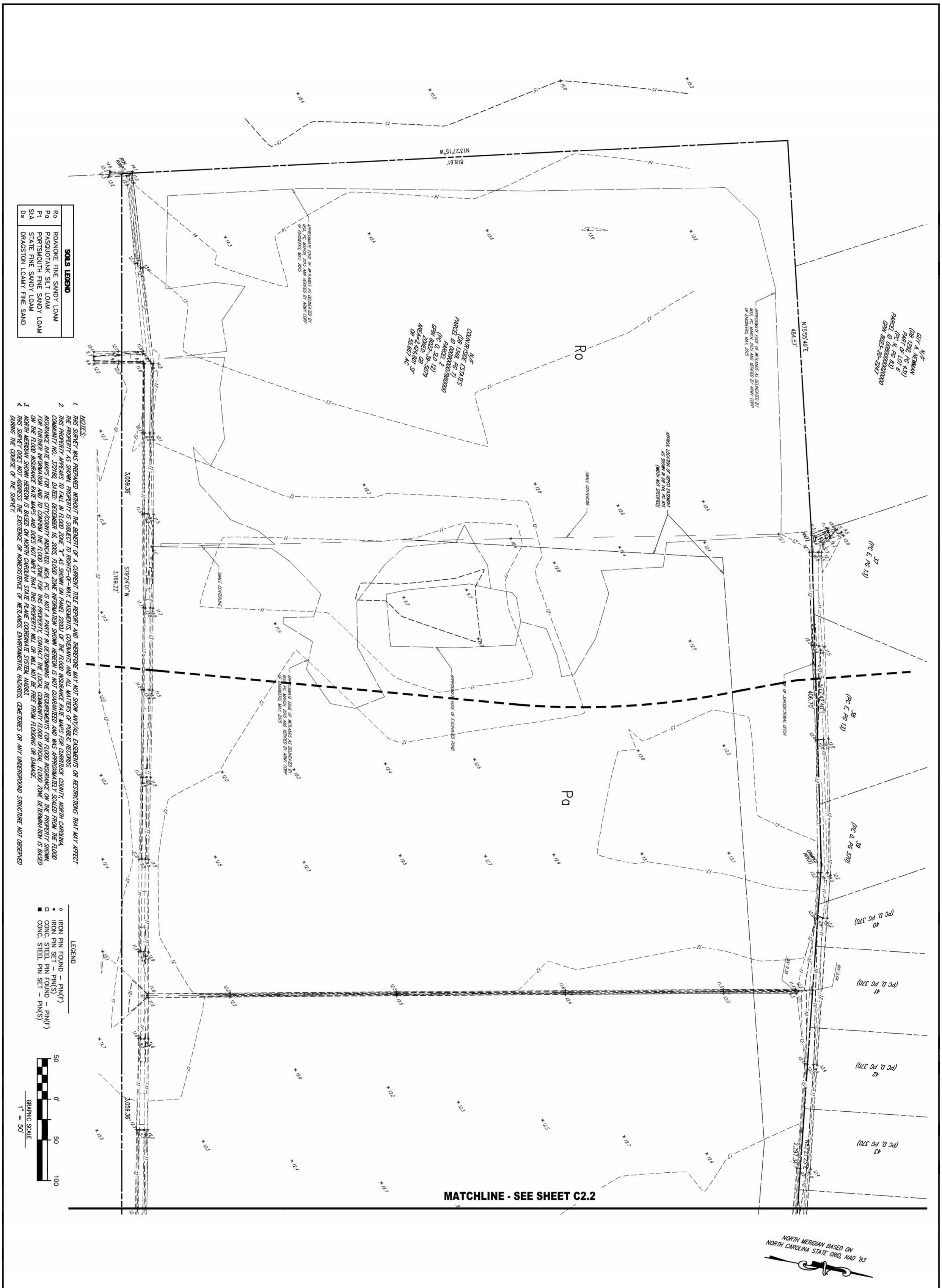

SHEET C2.1 4 of 43 Sheets
SCALE: 1"=50'
PROJ. NO.: 15021

TOPOGRAPHIC SURVEY / EXISTING CONDITIONS PLAN
of
COUNTRYSIDE ESTATES SINGLE-FAMILY SUBDIVISION
GPIN 8022-39-7183
(MB 21, PG 85, CHES., VA)
MOYOCK TOWNSHIP — CURRITUCK COUNTY, NC

REV. NO.	REV. BY.	REVISION DESCRIPTION	REVISION DATE

THIS DOCUMENT IS THE SOLE PROPERTY OF MSA, P.C., VIRGINIA BEACH, VA. THE MODIFICATION OF ANY DETAIL OR DESIGN OR USE FOR ANY PURPOSE OTHER THAN THAT INTENDED BY MSA, P.C. MAY NOT BE MADE WITHOUT THE EXPRESS WRITTEN CONSENT OF MSA, P.C.

DESIGNED CJL
DRAWN CJL
CHECKED CSA
APPROVED CSA
DATE 09/22/16

NORTH CAROLINA PROFESSIONAL ENGINEER SEAL 031728 09/22/16 SCOTT A. CIES

MSA, P.C.
Environmental Sciences • Planning • Surveying
Civil & Environmental Engineering • Landscape Architecture
5033 Rouse Drive, Virginia Beach, VA 23462
757-490-9264 (Ofc) 757-490-0634 (Fax)
www.msaonline.com

NOTES:

1. THIS SURVEY WAS PREPARED WITHOUT THE BENEFIT OF A CURRENT TITLE REPORT AND THEREFORE MAY NOT SHOW ANY/ALL EASEMENTS OR RESTRICTIONS THAT MAY AFFECT THE PROPERTY AS SHOWN. PROPERTY IS SUBJECT TO RIGHTS-OF-WAY, EASEMENTS, COVENANTS AND ALL MATTERS OF PUBLIC RECORDS.
2. THIS PROPERTY APPEARS TO FALL IN FLOOD ZONE "X" AS SHOWN ON PANEL 2200J OF THE FLOOD INSURANCE RATE MAPS FOR CURRITUCK COUNTY, NORTH CAROLINA, COMMUNITY NO.: 372108, DATED: DECEMBER 16, 2005. FLOOD ZONE INFORMATION SHOWN HEREON IS NOT GUARANTEED AND WAS APPROXIMATELY SCALED FROM THE FLOOD INSURANCE RATE MAPS. FOR THE CITY/COUNTY INDICATED. MSA, PC. IS NOT A PARTY IN DETERMINING THE REQUIREMENTS FOR FLOOD INSURANCE ON THE PROPERTY SHOWN. FOR FURTHER INFORMATION AND TO CONFIRM THE FLOOD ZONE FOR THIS PROPERTY, CONTACT THE LOCAL COMMUNITY FLOOD OFFICIAL. FLOOD ZONE DETERMINATION IS BASED ON THE FLOOD INSURANCE RATE MAPS AND DOES NOT IMPLY THAT THIS PROPERTY WILL OR WILL NOT BE FREE FROM FLOODING OR DAMAGE.
3. NORTH MERIDIAN SHOWN HEREON IS BASED ON NORTH CAROLINA STATE PLANE COORDINATE SYSTEM, NAD83.
4. THIS SURVEY DOES NOT ADDRESS THE EXISTENCE OR NONEXISTENCE OF WETLANDS, ENVIRONMENTAL HAZARDS, CEMETERIES OR ANY UNDERGROUND STRUCTURE NOT OBSERVED DURING THE COURSE OF THE SURVEY.

SOILS LEGEND

Ro	ROANOKE FINE SANDY LOAM
Pa	PASQUOTANK SILT LOAM
Pt	PORTSMOUTH FINE SANDY LOAM
StA	STATE FINE SANDY LOAM
Ds	DRAGSTON LOAMY FINE SAND

LEGEND

- ○ IRON PIN FOUND – PIN(F)
- ● IRON PIN SET – PIN(S)
- □ CONC. STEEL PIN FOUND – PIN(F)
- ■ CONC. STEEL PIN SET – PIN(S)

GRAPHIC SCALE
1" = 50'
50 0' 50 100

MATCHLINE - SEE SHEET C2.1

MATCHLINE - SEE SHEET C2.4

MATCHLINE - SEE SHEET C2.3

NORTH MERIDIAN BASED ON NORTH CAROLINA STATE GRID, NAD '83

PROJ. NO.:	15021
SCALE:	1"=50'
SHEET	C2.2
	5 of 43 Sheets

TOPOGRAPHIC SURVEY / EXISTING CONDITIONS PLAN
of
COUNTRYSIDE ESTATES SINGLE-FAMILY SUBDIVISION
GPIN 8022-39-7183
(MB 21, PG 85, CHES., VA)
MOYOCK TOWNSHIP — CURRITUCK COUNTY, NC

REV. NO.	REV. BY.	REVISION DESCRIPTION	REVISION DATE

THIS DOCUMENT IS THE SOLE PROPERTY OF MSA, P.C., VIRGINIA BEACH, VA. THE MODIFICATION OF ANY DETAIL OR DESIGN OR USE FOR ANY PURPOSE OTHER THAN THAT INTENDED BY MSA, P.C. MAY NOT BE MADE WITHOUT THE EXPRESS WRITTEN CONSENT OF MSA, P.C.

DESIGNED	CJL
DRAWN	CJL
CHECKED	CSA
APPROVED	CSA
DATE	09/22/16

NORTH CAROLINA PROFESSIONAL ENGINEER SEAL 031728 09/22/16 SCOTT ACE

MSA, P.C.
Environmental Sciences • Planning • Surveying
Civil & Environmental Engineering • Landscape Architecture
5033 Rouse Drive, Virginia Beach, VA 23462
757-490-9264 (Ofc) 757-490-0634 (Fax)
www.msaonline.com

MATCHLINE - SEE SHEET C2.2

MATCHLINE - SEE SHEET C2.4

SOILS LEGEND

Ro	ROANOKE FINE SANDY LOAM
Pq	PASQUOTANK SILT LOAM
Pt	PORTSMOUTH FINE SANDY LOAM
StA	STATE FINE SANDY LOAM
Ds	DRAGSTON LOAMY FINE SAND

NORTH CAROLINA STATE ROUTE 168 - CARATOKE HIGHWAY (100' RIGHT-OF-WAY)

NORTH MERIDIAN BASED ON NORTH CAROLINA STATE GRID, NAD '83

GRAPHIC SCALE 1" = 50'

LEGEND
- ○ IRON PIN FOUND - PIN(F)
- ● IRON PIN SET - PIN(S)
- □ CONC. STEEL PIN FOUND - PIN(F)
- ■ CONC. STEEL PIN SET - PIN(S)

NOTES:
1. THIS SURVEY WAS PREPARED WITHOUT THE BENEFIT OF A CURRENT TITLE REPORT AND THEREFORE MAY NOT SHOW ANY/ALL EASEMENTS OR RESTRICTIONS THAT MAY AFFECT THE PROPERTY AS SHOWN. PROPERTY IS SUBJECT TO RIGHTS-OF-WAY, EASEMENTS, COVENANTS AND ALL MATTERS OF PUBLIC RECORDS.
2. THIS PROPERTY APPEARS TO FALL IN FLOOD ZONE "X" AS SHOWN ON PANEL 2200J OF THE FLOOD INSURANCE RATE MAPS FOR CURRITUCK COUNTY, NORTH CAROLINA, COMMUNITY NO.: 372180, DATED: DECEMBER 16, 2005. FLOOD ZONE INFORMATION SHOWN HEREON IS NOT GUARANTEED AND WAS APPROXIMATELY SCALED FROM THE FLOOD INSURANCE RATE MAPS FOR THE CITY/COUNTY INDICATED. MSA, P.C. IS NOT A PARTY IN DETERMINING THE REQUIREMENTS FOR FLOOD INSURANCE ON THE PROPERTY SHOWN. FOR FURTHER INFORMATION AND TO CONFIRM THE FLOOD ZONE FOR THIS PROPERTY, CONTACT THE LOCAL COMMUNITY FLOOD OFFICIAL. FLOOD ZONE DETERMINATION IS BASED ON THE FLOOD INSURANCE RATE MAPS AND DOES NOT IMPLY THAT THIS PROPERTY WILL OR WILL NOT BE FREE FROM FLOODING OR DAMAGE.
3. NORTH MERIDIAN SHOWN HEREON IS BASED ON NORTH CAROLINA STATE PLANE COORDINATE SYSTEM, NAD83.
4. THIS SURVEY DOES NOT ADDRESS THE EXISTENCE OR NONEXISTENCE OF WETLANDS, ENVIRONMENTAL HAZARDS, CEMETERIES OR ANY UNDERGROUND STRUCTURE NOT OBSERVED DURING THE COURSE OF THE SURVEY.

SHEET	C2.3 (6 of 43 Sheets)
SCALE:	1"=50'
PROJ. NO.:	15021

TOPOGRAPHIC SURVEY / EXISTING CONDITIONS PLAN
of
COUNTRYSIDE ESTATES SINGLE-FAMILY SUBDIVISION
GPIN 8022-39-7183
(MB 21, PG 85, CHES., VA)
MOYOCK TOWNSHIP — CURRITUCK COUNTY, NC

REV. NO.	REV. BY	REVISION DESCRIPTION	REVISION DATE

THIS DOCUMENT IS THE SOLE PROPERTY OF MSA, P.C., VIRGINIA BEACH, VA. THE MODIFICATION OF ANY DETAIL OR DESIGN OR USE FOR ANY PURPOSE OTHER THAN THAT INTENDED BY MSA, P.C. MAY NOT BE MADE WITHOUT THE EXPRESS WRITTEN CONSENT OF MSA, P.C.

DESIGNED	CJL
DRAWN	CJL
CHECKED	CSA
APPROVED	CSA
DATE	09/22/16

NORTH CAROLINA PROFESSIONAL SEAL 031728 ENGINEER CHRISTOPHER SCOTT ACREE 09/22/16

MSA, P.C.
Environmental Sciences • Planning • Surveying
Civil & Environmental Engineering • Landscape Architecture
5033 Rouse Drive, Virginia Beach, VA 23462
757-490-9264 (Ofc) 757-490-0634 (Fax)
www.msaonline.com

NOTES:

1. THIS SURVEY WAS PREPARED WITHOUT THE BENEFIT OF A CURRENT TITLE REPORT AND THEREFORE MAY NOT SHOW ANY/ALL EASEMENTS OR RESTRICTIONS THAT MAY AFFECT THE PROPERTY AS SHOWN. PROPERTY IS SUBJECT TO RIGHTS-OF-WAY, EASEMENTS, COVENANTS AND ALL MATTERS OF PUBLIC RECORDS.
2. THIS PROPERTY APPEARS TO FALL IN FLOOD ZONE "X" AS SHOWN ON PANEL 2200J OF THE FLOOD INSURANCE RATE MAPS FOR CURRITUCK COUNTY, NORTH CAROLINA, COMMUNITY NO.: 372180, DATED: DECEMBER 16, 2005. FLOOD ZONE INFORMATION SHOWN HEREON IS NOT AND WAS APPROXIMATELY SCALED FROM THE FLOOD INSURANCE RATE MAPS FOR THE CITY/COUNTY INDICATED. MSA, PC. IS NOT A PARTY IN DETERMINING THE REQUIREMENTS FOR FLOOD INSURANCE ON THE PROPERTY SHOWN. FOR FURTHER INFORMATION AND TO CONFIRM THE FLOOD ZONE FOR THIS PROPERTY, CONTACT THE LOCAL COMMUNITY FLOOD OFFICIAL. FLOOD ZONE DETERMINATION IS BASED ON THE FLOOD INSURANCE RATE MAPS AND DOES NOT IMPLY THAT THIS PROPERTY WILL OR WILL NOT BE FREE FROM FLOODING OR DAMAGE.
3. NORTH MERIDIAN SHOWN HEREON IS BASED ON NORTH CAROLINA STATE PLANE COORDINATE SYSTEM, NAD83.
4. THIS SURVEY DOES NOT ADDRESS THE EXISTENCE OR NONEXISTENCE OF WETLANDS, ENVIRONMENTAL HAZARDS, CEMETERIES OR ANY UNDERGROUND STRUCTURE NOT OBSERVED DURING THE COURSE OF THE SURVEY.

LEGEND

- ○ IRON PIN FOUND – PIN(F)
- ● IRON PIN SET – PIN(S)
- □ CONC. STEEL PIN FOUND – PIN(F)
- ■ CONC. STEEL PIN SET – PIN(S)

SOILS LEGEND	
Ro	ROANOKE FINE SANDY LOAM
Pa	PASQUOTANK SILT LOAM
Pt	PORTSMOUTH FINE SANDY LOAM
StA	STATE FINE SANDY LOAM
Ds	DRAGSTON LOAMY FINE SAND

GRAPHIC SCALE
1" = 50'
0' 50 100

NORTH MERIDIAN BASED ON NORTH CAROLINA STATE GRID, NAD '83

MATCHLINE - SEE SHEET C2.2

MATCHLINE - SEE SHEET C2.3

CURRITUCK F & M LAND CO, LLC
PARCEL ID 0080000035000
GPIN 8022-48-2471
(DB 888, PG 278)
(PC 1, PG 198)

CURRITUCK F & M LAND CO, LLC
PARCEL ID 0080000027000
GPIN 8022-48-2471
(DB 888, PG 278)
(PC 1, PG 198)

CURRITUCK F & M LAND CO, LLC
PARCEL ID 0080000028000
GPIN 8022-48-2471
(DB 888, PG 278)
(PC 1, PG 198)

DENNIS D. GASKINS
PARCEL ID 0080000027000
GPIN 8022-58-5868
(DB 491, PG 71)
(PC 1, PG 198)

DENNIS D. GASKINS
PARCEL ID 0080000026000
GPIN 8022-58-5868
(DB 491, PG 71)
(PC 1, PG 198)

BEATRICE W. FRANKLIN
PARCEL ID 0080000030000
GPIN 8022-58-6736
(DB 380, PG 353)
(PC 1, PG 198)

CURRITUCK COMMERCIAL PROPERTIES, LLC
PARCEL ID 0080000028000
GPIN 8022-58-5949
(DB 1023, PG 280)
(PC 4, PG 84)

S16°34'05"E 155.02'
S18°15'21"E 203.16'
S79°23'29"W 390.56'
N17°49'54"W 111.02'
N17°07'01"W 251.06'
S17°07'01"E 557.70'

NORTH CAROLINA STATE ROUTE 168
CARATOKE HIGHWAY (100' RIGHT-OF-WAY)

SHEET	PROJ. NO.:	SCALE:
C2.4	15021	1"=50'
7 of 43 Sheets		

TOPOGRAPHIC SURVEY / EXISTING CONDITIONS PLAN
of
COUNTRYSIDE ESTATES SINGLE-FAMILY SUBDIVISION
GPIN 8022-39-7183
(MB 21, PG 85, CHES., VA)
MOYOCK TOWNSHIP — CURRITUCK COUNTY, NC

REV. NO.	REV. BY	REVISION DESCRIPTION	REVISION DATE

THIS DOCUMENT IS THE SOLE PROPERTY OF MSA, P.C., VIRGINIA BEACH, VA. THE MODIFICATION OF ANY DETAIL OR DESIGN OR USE FOR ANY PURPOSE OTHER THAN THAT INTENDED BY MSA, P.C. MAY NOT BE MADE WITHOUT THE EXPRESS WRITTEN CONSENT OF MSA, P.C.

DESIGNED	CJL
DRAWN	CJL
CHECKED	CSA
APPROVED	CSA
DATE	09/22/16

NORTH CAROLINA PROFESSIONAL SEAL 031728 ENGINEER SCOTT ACE 09/22/16

MSA, P.C.
Environmental Sciences • Planning • Surveying
Civil & Environmental Engineering • Landscape Architecture
5033 Rouse Drive, Virginia Beach, VA 23462
757-490-9264 (Ofc) 757-490-0634 (Fax)
www.msaonline.com

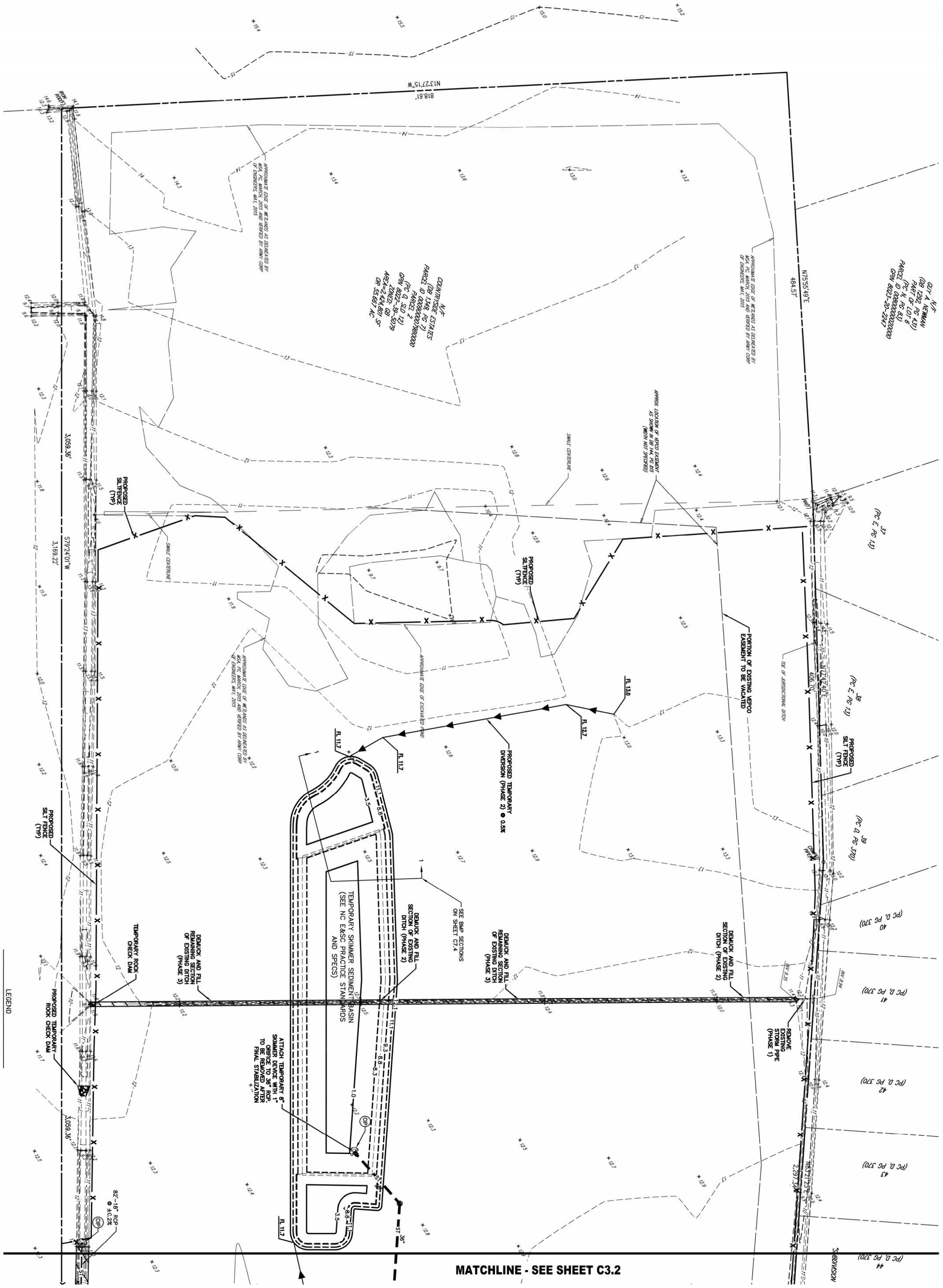

SHEET C3.1 8 of 43 Sheets

SCALE: 1"=50'

PROJ. NO.: 15021

DEMOLITION, EROSION & SEDIMENT CONTROL PLAN
of
COUNTRYSIDE ESTATES SINGLE-FAMILY SUBDIVISION
GPIN 8022-39-7183
(MB 21, PG 85, CHES., VA)
MOYOCK TOWNSHIP — CURRITUCK COUNTY, NC

REV. NO.	REV. BY	REVISION DESCRIPTION	REVISION DATE

THIS DOCUMENT IS THE SOLE PROPERTY OF MSA, P.C., VIRGINIA BEACH, VA. THE MODIFICATION OF ANY DETAIL OR DESIGN OR USE FOR ANY PURPOSE OTHER THAN THAT INTENDED BY MSA, P.C. MAY NOT BE MADE WITHOUT THE EXPRESS WRITTEN CONSENT OF MSA, P.C.

DESIGNED	CJL
DRAWN	CJL
CHECKED	CSA
APPROVED	CSA
DATE	09/22/16

NORTH CAROLINA PROFESSIONAL SEAL 031728 09/22/16 ENGINEER SCOTT A. CEY

MSA, P.C.
Environmental Sciences • Planning • Surveying
Civil & Environmental Engineering • Landscape Architecture
5033 Rouse Drive, Virginia Beach, VA 23462
757-490-9264 (Ofc) 757-490-0634 (Fax)
www.msaonline.com

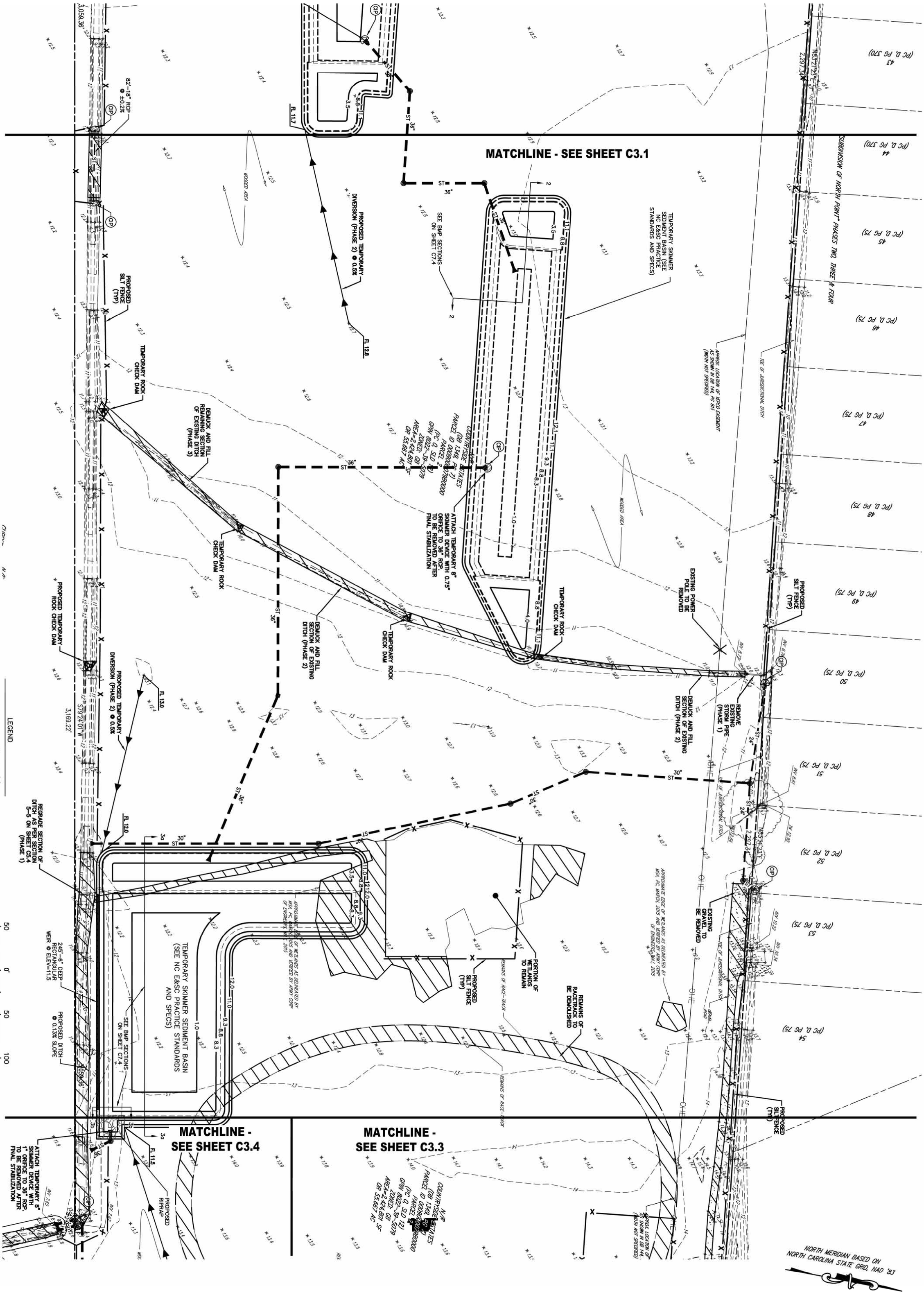

DEMOLITION, EROSION & SEDIMENT CONTROL PLAN
of
COUNTRYSIDE ESTATES SINGLE-FAMILY SUBDIVISION
GPIN 8022-39-7183
(MB 21, PG 85, CHES., VA)
MOYOCK TOWNSHIP — CURRITUCK COUNTY, NC

REV. NO.	REV. BY.	REVISION DESCRIPTION	REVISION DATE

THIS DOCUMENT IS THE SOLE PROPERTY OF MSA, P.C., VIRGINIA BEACH, VA. THE MODIFICATION OF ANY DETAIL OR DESIGN OR USE FOR ANY PURPOSE OTHER THAN THAT INTENDED BY MSA, P.C. MAY NOT BE MADE WITHOUT THE EXPRESS WRITTEN CONSENT OF MSA, P.C.

DESIGNED CJL
DRAWN CJL
CHECKED CSA
APPROVED CSA
DATE 09/22/16

NORTH CAROLINA PROFESSIONAL SEAL 031728 09/22/16 ENGINEER C. SCOTT ALLEN

MSA, P.C.
Environmental Sciences • Planning • Surveying
Civil & Environmental Engineering • Landscape Architecture
5033 Rouse Drive, Virginia Beach, VA 23462
757-490-9264 (Ofc) 757-490-0634 (Fax)
www.msaonline.com

PROJ. NO.: 15021
SCALE: 1"=50'
SHEET C3.2
9 of 43 Sheets

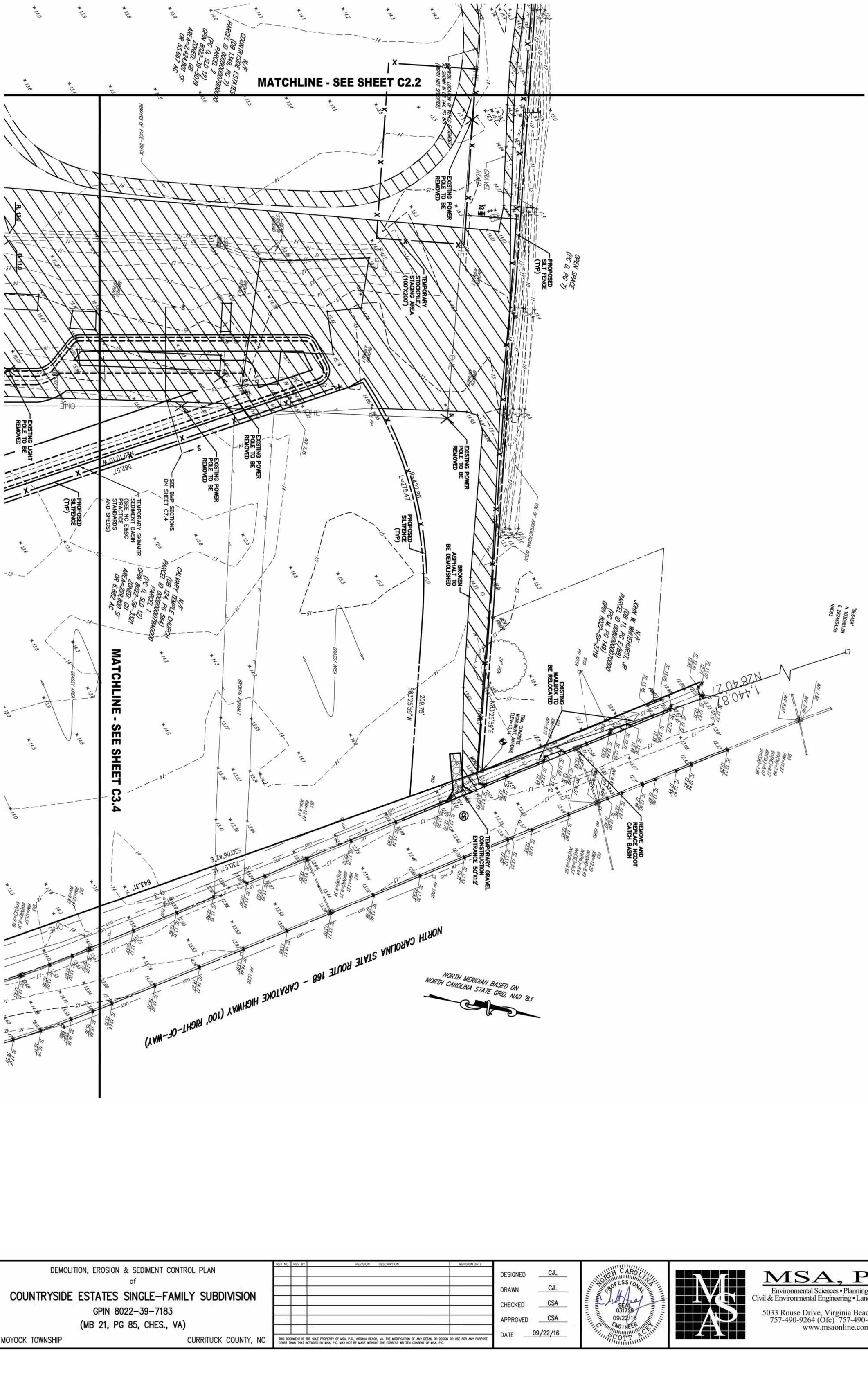

DEMOLITION, EROSION & SEDIMENT CONTROL PLAN
of
COUNTRYSIDE ESTATES SINGLE-FAMILY SUBDIVISION
GPIN 8022-39-7183
(MB 21, PG 85, CHES., VA)
MOYOCK TOWNSHIP — CURRITUCK COUNTY, NC

REV. NO.	REV. BY.	REVISION DESCRIPTION	REVISION DATE

THIS DOCUMENT IS THE SOLE PROPERTY OF MSA, P.C., VIRGINIA BEACH, VA. THE MODIFICATION OF ANY DETAIL OR DESIGN OR USE FOR ANY PURPOSE OTHER THAN THAT INTENDED BY MSA, P.C. MAY NOT BE MADE WITHOUT THE EXPRESS WRITTEN CONSENT OF MSA, P.C.

DESIGNED CJL
DRAWN CJL
CHECKED CSA
APPROVED CSA
DATE 09/22/16

NORTH CAROLINA PROFESSIONAL ENGINEER SEAL 031728 09/22/16 C. SCOTT ACREE

MSA, P.C.
Environmental Sciences • Planning • Surveying
Civil & Environmental Engineering • Landscape Architecture
5033 Rouse Drive, Virginia Beach, VA 23462
757-490-9264 (Ofc) 757-490-0634 (Fax)
www.msaonline.com

PROJ. NO.: 15021
SCALE: 1"=50'
SHEET C3.3
10 of 43 Sheets

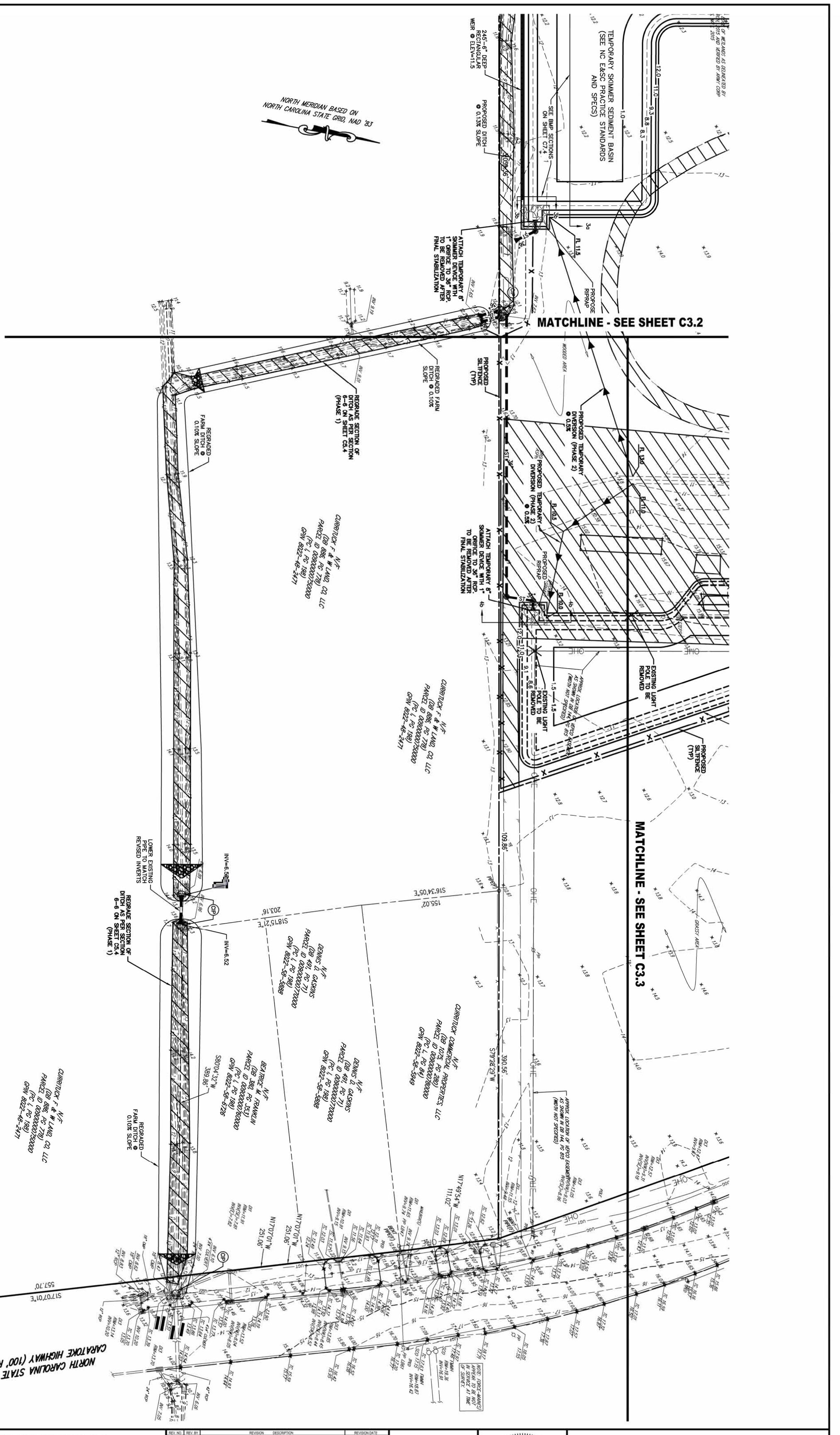

DEMOLITION, EROSION & SEDIMENT CONTROL PLAN
of
COUNTRYSIDE ESTATES SINGLE-FAMILY SUBDIVISION
GPIN 8022-39-7183
(MB 21, PG 85, CHES., VA)
MOYOCK TOWNSHIP — CURRITUCK COUNTY, NC

REV. NO.	REV. BY.	REVISION DESCRIPTION	REVISION DATE

THIS DOCUMENT IS THE SOLE PROPERTY OF MSA, P.C., VIRGINIA BEACH, VA. THE MODIFICATION OF ANY DETAIL OR DESIGN OR USE FOR ANY PURPOSE OTHER THAN THAT INTENDED BY MSA, P.C. MAY NOT BE MADE WITHOUT THE EXPRESS WRITTEN CONSENT OF MSA, P.C.

DESIGNED	CJL
DRAWN	CJL
CHECKED	CSA
APPROVED	CSA
DATE	09/22/16

NORTH CAROLINA PROFESSIONAL SEAL 031728 09/22/16 ENGINEER C. SCOTT ACEY

MSA, P.C.
Environmental Sciences • Planning • Surveying
Civil & Environmental Engineering • Landscape Architecture
5033 Rouse Drive, Virginia Beach, VA 23462
757-490-9264 (Ofc) 757-490-0634 (Fax)
www.msaonline.com

PROJ. NO.: 15021
SCALE: 1"=50'
SHEET C3.4
11 of 43 Sheets

NORTH MERIDIAN BASED ON NORTH CAROLINA STATE GRID, NAD 83

SANITARY SEWER SCHEDULE

- (A) NCDOT SS MANHOLE RIM=12.22 INV=4.32
- (A) TO (B) 121'–8" PVC @ 0.40%
- (B) NCDOT SS MANHOLE RIM=11.73 INV(IN)=3.84 INV(OUT)=3.81
- (B) TO (C) 107'–8" PVC @ 0.40%
- (C) NCDOT SS MANHOLE RIM=12.36 INV(IN)=3.38 INV(OUT)=3.35
- (C) TO (F) 267'–8" PVC @ 0.40%
- (D) NCDOT SS MANHOLE RIM=11.57 INV(OUT)=4.75
- (D) TO (E) 307'–8" PVC @ 0.40%
- (E) NCDOT SS MANHOLE RIM=12.35 INV(IN)=3.52 INV(OUT)=3.49
- (E) TO (F) 311'–8" PVC @ 0.40%
- (F) NCDOT SS MANHOLE RIM=11.71 INV(IN)=2.28 (E) INV(IN)=2.25 (S) INV(OUT)=2.25 (W)
- (F) TO (G) 400'–8" PVC @ 0.40%
- (G) NCDOT SS MANHOLE RIM=13.60 INV(IN)=0.65 INV(OUT)=0.62
- (G) TO (H) 400'–8" PVC @ 0.40%
- (H) NCDOT SS MANHOLE RIM=12.71 INV(IN)=–0.98 INV(OUT)=–1.01
- (H) TO (K) 304'–8" PVC @ 0.40%
- (I) NCDOT SS MANHOLE RIM=12.86 INV(OUT)=5.65
- (I) TO (J) 319'–8" PVC @ 0.40%
- (J) NCDOT SS MANHOLE RIM=12.10 INV(IN)=4.38 INV(OUT)=4.35
- (J) TO (K) 319'–8" PVC @ 0.40%
- (K) NCDOT SS MANHOLE RIM=12.00 INV(IN)=3.07 (W) INV(IN)=–2.23 (E) INV(OUT)=–2.26 (S)
- (K) TO (R) 276'–8" PVC @ 0.40%
- (L) NCDOT SS MANHOLE RIM=12.00 INV(OUT)=3.34
- (L) TO (M) 305'–8" PVC @ 0.40%
- (M) NCDOT SS MANHOLE RIM=12.33 INV(IN)=2.12 INV(OUT)=2.09
- (M) TO (Q) 305'–8" PVC @ 0.40%
- (N) NCDOT SS MANHOLE RIM=11.42 INV(OUT)=5.61
- (N) TO (O) 295'–8" PVC @ 0.40%
- (O) NCDOT SS MANHOLE RIM=11.54 INV(IN)=4.43 INV(OUT)=4.40
- (O) TO (Q) 295'–8" PVC @ 0.40%
- (P) NCDOT SS MANHOLE RIM=13.11 INV(IN)=–3.54 INV(OUT)=–3.57
- (P) TO (Q) 203'–8" PVC @ 0.40%
- (Q) NCDOT SS MANHOLE RIM=11.75 INV(IN)=3.22 (E) INV(IN)=0.87 (W) INV(IN)=–4.38 (S) INV(OUT)=–4.41 (N)
- (Q) TO (R) 126'–8" PVC @ 0.40%
- (R) NCDOT SS MANHOLE RIM=12.00 INV(IN)=–3.36 (N) INV(IN)=–4.91 (S) INV(OUT)=–4.94 (W)
- (R) TO (S) 24'–8" PVC @ 0.40%
- (S) NCDOT SS MANHOLE RIM=12.50 INV=–5.04

UTILITY NOTES:

1. WATER MAINS SHALL BE SDR–21 (200 PSI) PVC, AND WATER SERVICE LINES SHALL BE 1–INCH SDR–9 (200 PSI) CTS TUBING.
2. FIRE HYDRANT LOCATION MARKERS:
   CONTRACTOR SHALL INSTALL AT ALL HYDRANT LOCATIONS A REFLECTIVE HYDRANT MARKER, STIMPSONITE, MODEL 88AB, TWO–WAY BLUE REFLECTOR IN CENTERLINE OF PAVEMENT PERPENDICULAR TO HYDRANT LOCATION USING E–BOND EPOXY ADHESIVE 1240/1241 PER MANUFACTURER'S SPECIFICATIONS
3. VALVE LOCATION MARKERS:
   ALL VALVE LOCATIONS AND BLOW OFFS SHALL BE MARKED WITH A CONCRETE VALVE MARKER WITH A METAL COIN ON TOP SHOWING VALVE SIZE, DISTANCE, AND DIRECTION
4. UNDERGROUND PIPE MARKERS:
   - PLASTIC RIBBON TAPE: ACID– AND ALKALI–RESISTANT POLYETHYLENE FILM WARNING TAPE MANUFACTURED FOR MARKING AND IDENTIFYING UNDERGROUND UTILITIES, 3 INCHES WIDE AND 4 MILS THICK MINIMUM, CONTINUOUSLY INSCRIBED WITH A DESCRIPTION OF THE UTILITY, WITH METALLIC CORE ENCASED IN A PROTECTIVE JACKET FOR CORROSION PROTECTION, DETECTABLE BY METAL DETECTOR WHEN TAPE IS BURIED UP TO 2'–6" DEEP. TAPE SHALL BE ALARMTAPE BY PAUL POTTER ASSOCIATES, DETECTATAPE BY ALLEN SYSTEMS, INC., TERRA TAPE BY GRIFFOLYN CO., INC., OR APPROVED EQUAL
   - COLOR: BLUE
   - TEXT: "CAUTION – WATER LINE BURIED BELOW"
   - DETECTABLE TRACER WIRE: AT ALL LOCATIONS WHERE PRESSURE PIPING IS INSTALLED AND AT LATERAL LOCATIONS, NON–FERROUS OR FERROUS MATERIALS, THE CONTRACTOR SHALL INSTALL A CONTINUOUS LENGTH OF #12 SOLID COPPER WIRE, ON TOP AND PARALLEL TO THE PIPE
5. SERVICE LINES:
   - ALL SERVICE LINES CONNECTING TO 2–INCH WATER MAINS SHALL BE CONNECTED VIA 2–INCH X 1–INCH SADDLE, AY MCDONALD MODEL #3891.
   - ALL SERVICE LINES CONNECTING TO 8–INCH WATER MAINS SHALL BE CONNECTED VIA 1–INCH CORP STOP, AY MCDONALD MODEL #74701T.
6. SERVICE LINE SLEEVES:
   IN THE EVENT A SERVICE LINE MUST CROSS UNDER A CUL–DE–SAC, THE CONTINUOUS LENGTH OF COPPER TUBING MUST BE SLEEVED INSIDE A 2–INCH MINIMUM SDR 35, OR SCH 40 PVC PIPE.

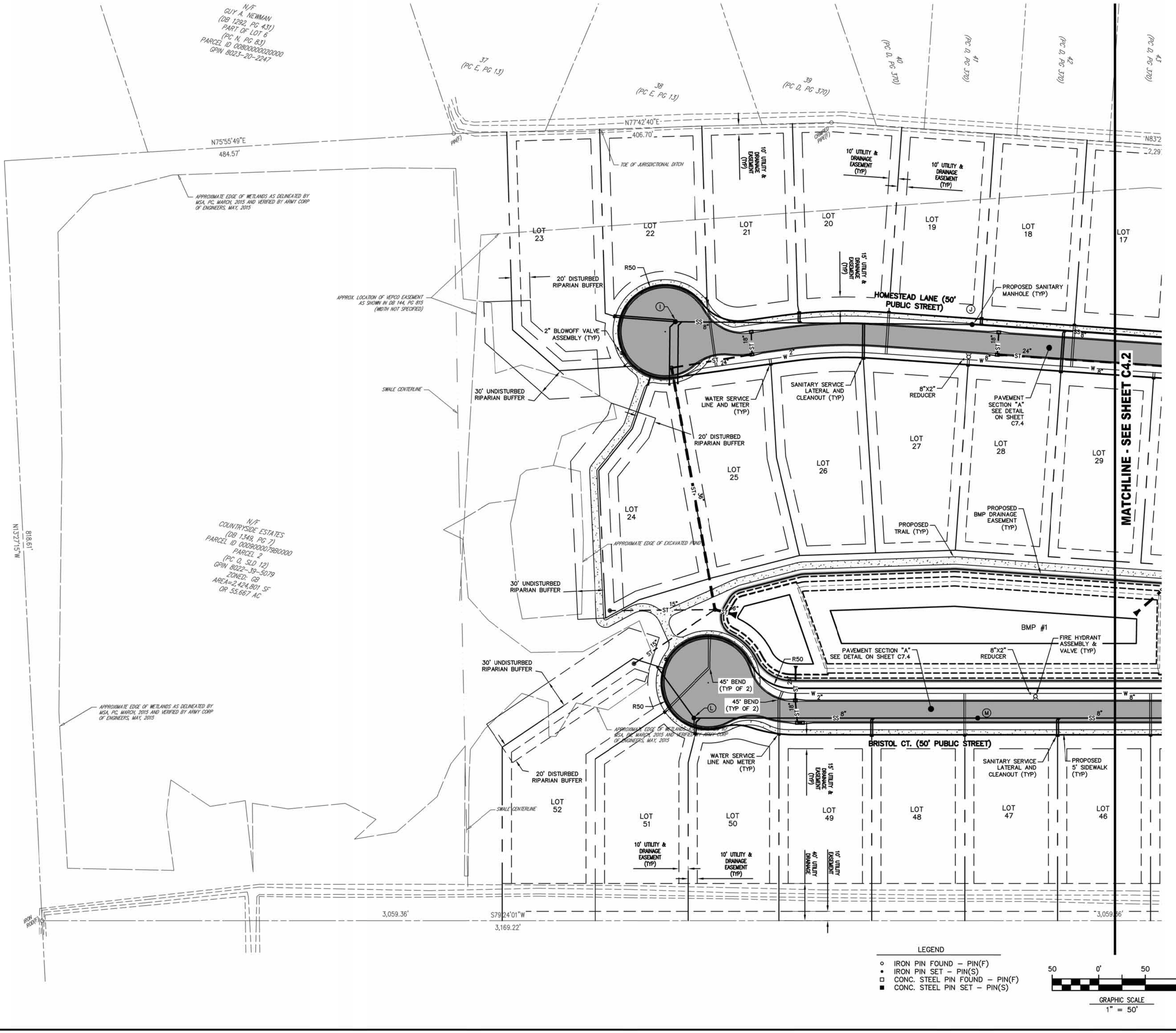

LEGEND

- ○ IRON PIN FOUND – PIN(F)
- • IRON PIN SET – PIN(S)
- □ CONC. STEEL PIN FOUND – PIN(F)
- ■ CONC. STEEL PIN SET – PIN(S)

50 0' 50 100

GRAPHIC SCALE 1" = 50'

MSA, P.C.
Environmental Sciences • Planning • Surveying
Civil & Environmental Engineering • Landscape Architecture
5033 Rouse Drive, Virginia Beach, VA 23462
757-490-9264 (OFC) 757-490-0634 (Fax)
www.msaonline.com

NORTH CAROLINA PROFESSIONAL ENGINEER SEAL 031729 09/22/16 CHRISTOPHER L. SCOTT

DESIGNED	CJL
DRAWN	CJL
CHECKED	CSA
APPROVED	CSA
DATE	09/22/16

REVISION	DESCRIPTION	BY	DATE

THIS DOCUMENT IS THE SOLE PROPERTY OF MSA, P.C., WORK BOOK, OR THE REPRODUCTION OF ANY DETAIL OR DESIGN OR SIMILAR WORK THAT INTENDED BY MSA, P.C. ANY USE BE MADE, WITHOUT THE EXPRESS WRITTEN CONSENT OF MSA, P.C.

LAYOUT AND UTILITIES PLAN of

COUNTRYSIDE ESTATES SINGLE–FAMILY SUBDIVISION

GPIN 8022–39–7183
(MB 21, PG 85, CHES., VA)

CURRITUCK COUNTY, NC

MOYOCK TOWNSHIP

SHEET C4.1
12 of 43 Sheets

SCALE: 1"=50'

PROJ. NO.: 15021

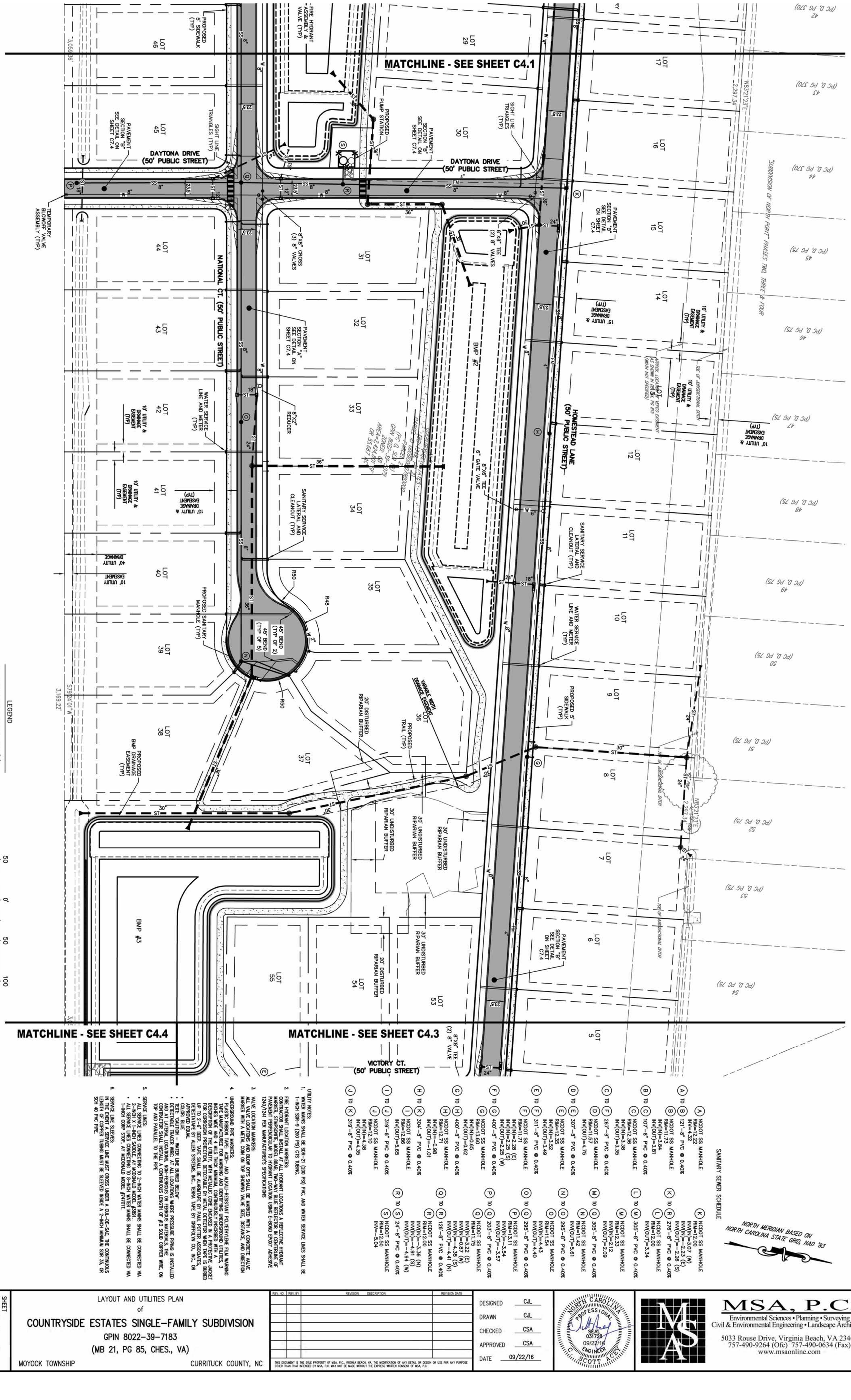

LEGEND

- ○ IRON PIN FOUND – PIN(F)
- ● IRON PIN SET – PIN(S)
- □ CONC. STEEL PIN FOUND – PIN(F)
- ■ CONC. STEEL PIN SET – PIN(S)

UTILITY NOTES:

1. WATER MAINS SHALL BE SDR-21 (200 PSI) PVC, AND WATER SERVICE LINES SHALL BE 1-INCH SDR-9 (200 PSI) CTS TUBING.
2. FIRE HYDRANT LOCATION MARKERS:
   CONTRACTOR SHALL INSTALL AT ALL HYDRANT LOCATIONS A REFLECTIVE HYDRANT MARKER. STIMSPONITE, MODEL 88AB, TWO-WAY BLUE REFLECTOR IN CENTERLINE OF PAVEMENT PERPENDICULAR TO HYDRANT LOCATION USING E-BOND EPOXY ADHESIVE 1240/1241 PER MANUFACTURER'S SPECIFICATIONS
3. VALVE LOCATION MARKERS:
   ALL VALVE LOCATIONS AND BLOW OFFS SHALL BE MARKED WITH A CONCRETE VALVE MARKER WITH A METAL COIN ON TOP SHOWING VALVE SIZE, DISTANCE, AND DIRECTION
4. UNDERGROUND PIPE MARKERS:
   - PLASTIC RIBBON TAPE: ACID- AND ALKALI-RESISTANT POLYETHYLENE FILM WARNING TAPE MANUFACTURED FOR MARKING AND IDENTIFYING UNDERGROUND UTILITIES, 3 INCHES WIDE AND 4 MILS THICK MINIMUM, CONTINUOUSLY INSCRIBED WITH A DESCRIPTION OF THE UTILITY, WITH METALLIC CORE ENCASED IN A PROTECTIVE JACKET FOR CORROSION PROTECTION, DETECTABLE BY METAL DETECTOR WHEN TAPE IS BURIED UP TO 2'-6" DEEP. TAPE SHALL BE ALARMTAPE BY PAUL POTTER ASSOCIATES, DETECTATAPE BY ALLEN SYSTEMS, INC., TERRA TAPE BY GRIFFOLYN CO., INC., OR APPROVED EQUAL
   - COLOR: BLUE
   - TEXT: 'CAUTION – WATER LINE BURIED BELOW'
   - DETECTABLE TRACER WIRE: AT ALL LOCATIONS WHERE PRESSURE PIPING IS INSTALLED AND AT LATERAL LOCATIONS, NON-FERROUS OR FERROUS MATERIALS, THE CONTRACTOR SHALL INSTALL A CONTINUOUS LENGTH OF #12 SOLID COPPER WIRE, ON TOP AND PARALLEL TO THE PIPE
5. SERVICE LINES:
   - ALL SERVICE LINES CONNECTING TO 2-INCH WATER MAINS SHALL BE CONNECTED VIA 2-INCH X 1-INCH SADDLE, AY MCDONALD MODEL #3891.
   - ALL SERVICE LINES CONNECTING TO 8-INCH WATER MAINS SHALL BE CONNECTED VIA 1-INCH CORP STOP, AY MCDONALD MODEL #74701T.
6. SERVICE LINE SLEEVES:
   IN THE EVENT A SERVICE LINE MUST CROSS UNDER A CUL-DE-SAC, THE CONTINUOUS LENGTH OF COPPER TUBING MUST BE SLEEVED INSIDE A 2-INCH MINIMUM SDR 35, OR SCH 40 PVC PIPE.

SANITARY SEWER SCHEDULE

- (A) TO (B) 121'-8" PVC @ 0.40%
  - NCDOT SS MANHOLE RIM=12.22 INV=4.32
  - NCDOT SS MANHOLE RIM=11.73 INV(IN)=3.84 INV(OUT)=3.81
- (B) TO (C) 107'-8" PVC @ 0.40%
  - NCDOT SS MANHOLE RIM=12.36 INV(IN)=3.38 INV(OUT)=3.35
- (C) TO (F) 267'-8" PVC @ 0.40%
  - NCDOT SS MANHOLE RIM=11.57 INV(OUT)=4.75
- (D) TO (E) 307'-8" PVC @ 0.40%
  - NCDOT SS MANHOLE RIM=12.35 INV(IN)=3.52 INV(OUT)=3.49
- (E) TO (F) 311'-8" PVC @ 0.40%
  - NCDOT SS MANHOLE RIM=11.71 INV(IN)=2.28 (E) INV(IN)=2.25 (S) INV(OUT)=2.25 (W)
- (F) TO (G) 400'-8" PVC @ 0.40%
  - NCDOT SS MANHOLE RIM=13.60 INV(IN)=0.65 INV(OUT)=0.62
- (G) TO (H) 400'-8" PVC @ 0.40%
  - NCDOT SS MANHOLE RIM=12.71 INV(IN)=-0.98 INV(OUT)=-1.01
- (H) TO (K) 304'-8" PVC @ 0.40%
  - NCDOT SS MANHOLE RIM=12.86 INV(OUT)=5.65
- (I) TO (J) 319'-8" PVC @ 0.40%
  - NCDOT SS MANHOLE RIM=12.10 INV(IN)=4.38 INV(OUT)=4.35
- (J) TO (K) 319'-8" PVC @ 0.40%
  - NCDOT SS MANHOLE RIM=12.00 INV(IN)=3.07 (W) INV(IN)=-2.23 (E) INV(OUT)=-2.26 (S)
- (K) TO (R) 276'-8" PVC @ 0.40%
  - NCDOT SS MANHOLE RIM=12.00 INV(OUT)=3.34
- (L) TO (M) 305'-8" PVC @ 0.40%
  - NCDOT SS MANHOLE RIM=12.33 INV(IN)=2.12 INV(OUT)=2.09
- (M) TO (Q) 305'-8" PVC @ 0.40%
  - NCDOT SS MANHOLE RIM=11.42 INV(OUT)=5.61
- (N) TO (O) 295'-8" PVC @ 0.40%
  - NCDOT SS MANHOLE RIM=11.54 INV(IN)=4.43 INV(OUT)=4.40
- (O) TO (Q) 295'-8" PVC @ 0.40%
  - NCDOT SS MANHOLE RIM=13.11 INV(IN)=-3.54 INV(OUT)=-3.57
- (P) TO (Q) 203'-8" PVC @ 0.40%
  - NCDOT SS MANHOLE RIM=11.75 INV(IN)=3.22 (E) INV(IN)=0.87 (W) INV(IN)=-4.38 (S) INV(OUT)=-4.41 (N)
- (Q) TO (R) 126'-8" PVC @ 0.40%
  - NCDOT SS MANHOLE RIM=12.00 INV(IN)=-3.36 (N) INV(IN)=-4.91 (S) INV(OUT)=-4.94 (W)
- (R) TO (S) 24'-8" PVC @ 0.40%
  - NCDOT SS MANHOLE RIM=12.50 INV=-5.04

NORTH MERIDIAN BASED ON NORTH CAROLINA STATE GRID, NAD '83

REV. NO.	REV. BY	REVISION DESCRIPTION	REVISION DATE

THIS DOCUMENT IS THE SOLE PROPERTY OF MSA, P.C., VIRGINIA BEACH, VA. THE MODIFICATION OF ANY DETAIL OR DESIGN OR USE FOR ANY PURPOSE OTHER THAN THAT INTENDED BY MSA, P.C. MAY NOT BE MADE WITHOUT THE EXPRESS WRITTEN CONSENT OF MSA, P.C.

LAYOUT AND UTILITIES PLAN
of
COUNTRYSIDE ESTATES SINGLE-FAMILY SUBDIVISION
GPIN 8022-39-7183
(MB 21, PG 85, CHES., VA)

MOYOCK TOWNSHIP — CURRITUCK COUNTY, NC

DESIGNED	CJL
DRAWN	CJL
CHECKED	CSA
APPROVED	CSA
DATE	09/22/16

NORTH CAROLINA PROFESSIONAL ENGINEER SEAL 031728 09/22/16 SCOTT C. ALBERT

MSA, P.C.
Environmental Sciences • Planning • Surveying
Civil & Environmental Engineering • Landscape Architecture
5033 Rouse Drive, Virginia Beach, VA 23462
757-490-9264 (Ofc) 757-490-0634 (Fax)
www.msaonline.com

SHEET C4.2
13 of 43 Sheets
SCALE: 1"=50'
PROJ. NO.: 15021

UTILITY NOTES:

1. WATER MAINS SHALL BE SDR-21 (200 PSI) PVC, AND WATER SERVICE LINES SHALL BE 1-INCH SDR-9 (200 PSI) CTS TUBING.
2. FIRE HYDRANT LOCATION MARKERS:
   CONTRACTOR SHALL INSTALL AT ALL HYDRANT LOCATIONS A REFLECTIVE HYDRANT MARKER, STIMPSONITE, MODEL 88AB, TWO-WAY BLUE REFLECTOR IN CENTERLINE OF PAVEMENT PERPENDICULAR TO HYDRANT LOCATION USING E-BOND EPOXY ADHESIVE 1240/1241 PER MANUFACTURER'S SPECIFICATIONS
3. VALVE LOCATION MARKERS:
   ALL VALVE LOCATIONS AND BLOW OFFS SHALL BE MARKED WITH A CONCRETE VALVE MARKER WITH A METAL COIN ON TOP SHOWING VALVE SIZE, DISTANCE, AND DIRECTION
4. UNDERGROUND PIPE MARKERS:
   - PLASTIC RIBBON TAPE: ACID- AND ALKALI-RESISTANT POLYETHYLENE FILM WARNING TAPE MANUFACTURED FOR MARKING AND IDENTIFYING UNDERGROUND UTILITIES, 3 INCHES WIDE AND 4 MILS THICK MINIMUM, CONTINUOUSLY INSCRIBED WITH A DESCRIPTION OF THE UTILITY, WITH METALLIC CORE ENCASED IN A PROTECTIVE JACKET FOR CORROSION PROTECTION, DETECTABLE BY METAL DETECTOR WHEN TAPE IS BURIED UP TO 2'-6" DEEP. TAPE SHALL BE ALARMTAPE BY PAUL POTTER ASSOCIATES, DETECTATAPE BY ALLEN SYSTEMS, INC., TERRA TAPE BY GRIFFOLYN CO., INC., OR APPROVED EQUAL
   - COLOR: BLUE
   - TEXT: "CAUTION – WATER LINE BURIED BELOW"
   - DETECTABLE TRACER WIRE: AT ALL LOCATIONS WHERE PRESSURE PIPING IS INSTALLED AND AT LATERAL LOCATIONS, NON-FERROUS OR FERROUS MATERIALS, THE CONTRACTOR SHALL INSTALL A CONTINUOUS LENGTH OF #12 SOLID COPPER WIRE, ON TOP AND PARALLEL TO THE PIPE
5. SERVICE LINES:
   - ALL SERVICE LINES CONNECTING TO 2-INCH WATER MAINS SHALL BE CONNECTED VIA 2-INCH X 1-INCH SADDLE, AY MCDONALD MODEL #3891.
   - ALL SERVICE LINES CONNECTING TO 8-INCH WATER MAINS SHALL BE CONNECTED VIA 1-INCH CORP STOP, AY MCDONALD MODEL #74701T.
6. SERVICE LINE SLEEVES:
   IN THE EVENT A SERVICE LINE MUST CROSS UNDER A CUL-DE-SAC, THE CONTINUOUS LENGTH OF COPPER TUBING MUST BE SLEEVED INSIDE A 2-INCH MINIMUM SDR 35, OR SCH 40 PVC PIPE.
7. JACK AND BORE 8" STEEL CASING PIPE UNDER STATE ROUTE 168. PROPOSED 4" FORCEMAIN TO BE INSTALLED WITHIN CASING PIPE. SEE STEEL CASING DETAIL, SHEET C7.3.

LEGEND

- ○ IRON PIN FOUND – PIN(F)
- • IRON PIN SET – PIN(S)
- □ CONC. STEEL PIN FOUND – PIN(F)
- ■ CONC. STEEL PIN SET – PIN(S)

SANITARY SEWER SCHEDULE

A	NCDOT SS MANHOLE RIM=12.22 INV=4.32	
A TO B	121'–8" PVC @ 0.40%	
B	NCDOT SS MANHOLE RIM=11.73 INV(IN)=3.84 INV(OUT)=3.81	
B TO C	107'–8" PVC @ 0.40%	
C	NCDOT SS MANHOLE RIM=12.36 INV(IN)=3.38 INV(OUT)=3.35	
C TO F	267'–8" PVC @ 0.40%	
D	NCDOT SS MANHOLE RIM=11.57 INV(OUT)=4.75	
D TO E	307'–8" PVC @ 0.40%	
E	NCDOT SS MANHOLE RIM=12.35 INV(IN)=3.52 INV(OUT)=3.49	
E TO F	311'–8" PVC @ 0.40%	
F	NCDOT SS MANHOLE RIM=11.71 INV(IN)=2.28 (E) INV(IN)=2.25 (S) INV(OUT)=2.25 (W)	
F TO G	400'–8" PVC @ 0.40%	
G	NCDOT SS MANHOLE RIM=13.60 INV(IN)=0.65 INV(OUT)=0.62	
G TO H	400'–8" PVC @ 0.40%	
H	NCDOT SS MANHOLE RIM=12.71 INV(IN)=–0.98 INV(OUT)=–1.01	
H TO K	304'–8" PVC @ 0.40%	
I	NCDOT SS MANHOLE RIM=12.86 INV(OUT)=5.65	
I TO J	319'–8" PVC @ 0.40%	
J	NCDOT SS MANHOLE RIM=12.10 INV(IN)=4.38 INV(OUT)=4.35	
J TO K	319'–8" PVC @ 0.40%	
K	NCDOT SS MANHOLE RIM=12.00 INV(IN)=3.07 (W) INV(IN)=–2.23 (E) INV(OUT)=–2.26 (S)	
K TO R	276'–8" PVC @ 0.40%	
L	NCDOT SS MANHOLE RIM=12.00 INV(OUT)=3.34	
L TO M	305'–8" PVC @ 0.40%	
M	NCDOT SS MANHOLE RIM=12.33 INV(IN)=2.12 INV(OUT)=2.09	
M TO Q	305'–8" PVC @ 0.40%	
N	NCDOT SS MANHOLE RIM=11.42 INV(OUT)=5.61	
N TO O	295'–8" PVC @ 0.40%	
O	NCDOT SS MANHOLE RIM=11.54 INV(IN)=4.43 INV(OUT)=4.40	
O TO Q	295'–8" PVC @ 0.40%	
P	NCDOT SS MANHOLE RIM=13.11 INV(IN)=–3.54 INV(OUT)=–3.57	
P TO Q	203'–8" PVC @ 0.40%	
Q	NCDOT SS MANHOLE RIM=11.75 INV(IN)=3.22 (E) INV(IN)=0.87 (W) INV(IN)=–4.38 (S) INV(OUT)=–4.41 (N)	
Q TO R	126'–8" PVC @ 0.40%	
R	NCDOT SS MANHOLE RIM=12.00 INV(IN)=–3.36 (N) INV(IN)=–4.91 (S) INV(OUT)=–4.94 (W)	
R TO S	24'–8" PVC @ 0.40%	
S	NCDOT SS MANHOLE RIM=12.50 INV=–5.04	

"DE6459" N 1030981.88 E 2824664.55 NAD83

N/F JOHN W. WHITEHURST, JR. (DB 11, PG 5-B6) PARCEL ID 0080000007000 (PC M, PG 149) GPIN 8022-59-2719

1,440.87' N28°40'27"W

60' PAINT STRIPED RIVER

FULL WIDTH (12') PAVEMENT FOR FUTURE EXTENSION OF TURN LANE

34'

OHE

PP K054

PP K085

PAVEMENT SECTION "C" SEE DETAIL ON SHEET C7.4

150' TURN LANE

TBM, CONCRETE MONUMENT, NAVD88, ELEV=13.14

N83°25'59"E 174.89'

CONNECT TO EXISTING FORCEMAIN

CONNECT TO EXISTING WATER MAIN WITH 12"X8" TAPPING SLEEVE & VALVE

NORTH MERIDIAN BASED ON NORTH CAROLINA STATE GRID, NAD 83

PP L001

NORTH CAROLINA STATE ROUTE 168 – CARATOKE HIGHWAY (100' RIGHT-OF-WAY)

OHE

PP L028

S30°06'42"E 730.57'

643.31'

POLE

POND

TOE OF JURISDICTIONAL DITCH

OF JURISDICTIONAL DITCH

OPEN SPACE (PC D, PG 7)

10' UTILITY & DRAINAGE EASEMENT (TYP)

APPROX. LOCATION OF VEPCO EASEMENT AS SHOWN IN DB 144, PG 815 (WIDTH NOT SPECIFIED)

15' UTILITY & DRAINAGE EASEMENT (TYP)

LOT 1

LOT 2

LOT 3

LOT 4

LOT 5

LOT 6

WATER SERVICE LINE AND METER (TYP)

FIRE HYDRANT ASSEMBLY & VALVE (TYP)

PAVEMENT SECTION "B" SEE DETAIL ON SHEET C7.4

PROPOSED SANITARY MANHOLE (TYP)

HOMESTEAD LANE (50' PUBLIC STREET)

HOMESTEAD LANE (50' PUBLIC ROW)

R=422.95' L=275.47'

PAINTED MEDIAN MARKING

PAVEMENT SECTION "C" SEE DETAIL ON SHEET C7.4

CURB ISLAND

S83°25'59"W 209.75'

FIRE HYDRANT ASSEMBLY & VALVE (TYP)

SIGHT LINE TRIANGLES (TYP)

GRASSY AREA

SSMH RIM=14.51

SSMH RIM=14.54

BROKEN ASPHALT

N/F CALVARY TEMPLE CHURCH (DB 124, PG 564) PARCEL ID 0090000079A0000 PARCEL 1 (PC D, SLD 12) GPIN 8022-59-3321 ZONED: GB AREA=299,803 SF OR 6.882 AC

S82°57'N

MONUMENT

8"X8" TEE (2) 8" VALVE

SIGHT LINE TRIANGLES (TYP)

30' UNDISTURBED RIPARIAN BUFFER

20' DISTURBED RIPARIAN BUFFER

VICTORY CT. (50' PUBLIC STREET)

MATCHLINE - SEE SHEET C4.2

N/F SCOUNTRYSIDE ESTATES (DB 1349, PG 7) PARCEL ID 0090000079B0000 PARCEL 2 (PC D, SLD 12) GPIN 8022-39-3079 ZONED: GB AREA=2,424,801 SF OR 55.667 AC

LOT 52

LOT 53

LOT 54

LOT 55

LOT 56

LOT 57

LOT 58

LOT 59

LOT 60

LOT 61

LOT 62

PROPOSED BMP DRAINAGE EASEMENT (TYP)

15' UTILITY & DRAINAGE EASEMENT (TYP)

TEMPORARY BLOWOFF VALVE ASSEMBLY (TYP)

VICTORY CT. (50' PUBLIC STREET)

8" 8"X2" REDUCER

45° BEND (TYP OF 2)

WATER SERVICE LINE AND METER (TYP)

SANITARY SERVICE LATERAL AND CLEANOUT (TYP)

PROPOSED 5' SIDEWALK (TYP)

PAVEMENT SECTION "A" SEE DETAIL ON SHEET C7.4

BMP #4

MATCHLINE - SEE SHEET C4.4

45° BEND

8"X6" TEE

6" GATE VALVE

FIRE HYDRANT

FIRE HYDRANT BLOWUP (TYPICAL)

NOT TO SCALE

GRAPHIC SCALE 1" = 50'

MSA, P.C.
Environmental Sciences • Planning • Surveying
Civil & Environmental Engineering • Landscape Architecture
5033 Rouse Drive, Virginia Beach, VA 23462
757-490-9264 (OfC) 757-490-0634 (Fax)
www.msaonline.com

COMMONWEALTH OF VIRGINIA — PROFESSIONAL ENGINEER — C. SCOTT ANDREWS — 032729 — 09/22/16

DESIGNED	CJL
DRAWN	CJL
CHECKED	CSA
APPROVED	CSA
DATE	09/22/16

NO.	REVISION	DESCRIPTION

THIS DOCUMENT IS THE SOLE PROPERTY OF MSA, P.C., VIRGINIA BEACH, VA. THE REPRODUCTION OF ANY DETAIL OR DESIGN OF OUR FIRM IN ANY FORM WHATSOEVER WITHOUT THE EXPRESSED WRITTEN CONSENT OF MSA, P.C. IS STRICTLY PROHIBITED. THIS DOCUMENT IS NOT TO BE USED FOR ANY PURPOSE OTHER THAN WHAT IS INTENDED BY MSA, P.C. & ANY USE OF THIS DOCUMENT FOR ANY OTHER PURPOSE WITHOUT THE WRITTEN CONSENT OF MSA, P.C. IS AT THE USER'S SOLE RISK AND WITHOUT LIABILITY TO MSA, P.C.

LAYOUT AND UTILITIES PLAN
of
COUNTRYSIDE ESTATES SINGLE-FAMILY SUBDIVISION
GPIN 8022-39-7183
(MB 21, PG 85, CHES., VA)
MOYOCK TOWNSHIP — CURRITUCK COUNTY, NC

SHEET C4.3
14 of 43 Sheets

SCALE: 1"=50'

PROJ. NO.: 15021

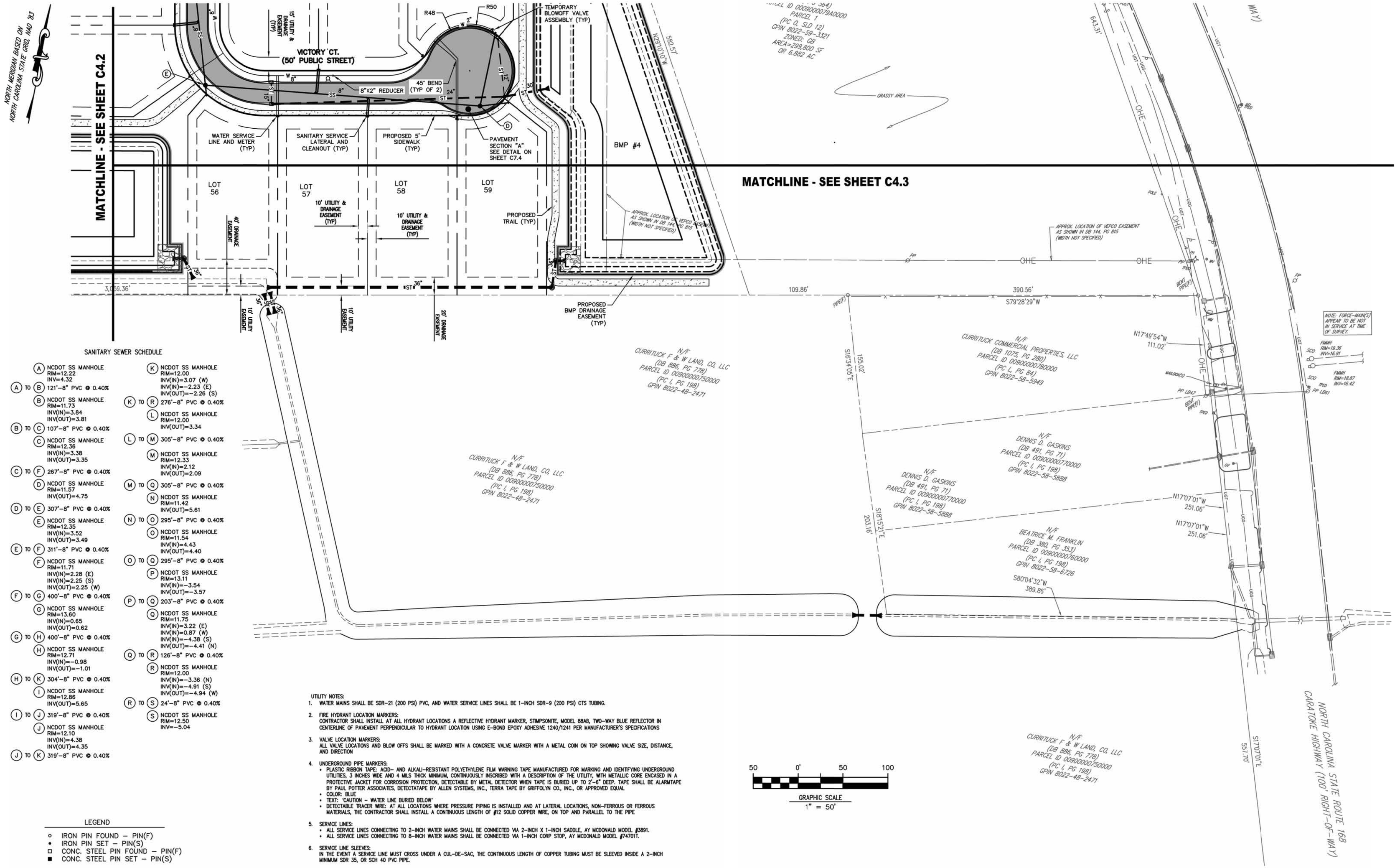

SANITARY SEWER SCHEDULE

- (A) NCDOT SS MANHOLE RIM=12.22 INV=4.32
- (A) TO (B) 121'–8" PVC @ 0.40%
- (B) NCDOT SS MANHOLE RIM=11.73 INV(IN)=3.84 INV(OUT)=3.81
- (B) TO (C) 107'–8" PVC @ 0.40%
- (C) NCDOT SS MANHOLE RIM=12.36 INV(IN)=3.38 INV(OUT)=3.35
- (C) TO (F) 267'–8" PVC @ 0.40%
- (D) NCDOT SS MANHOLE RIM=11.57 INV(OUT)=4.75
- (D) TO (E) 307'–8" PVC @ 0.40%
- (E) NCDOT SS MANHOLE RIM=12.35 INV(IN)=3.52 INV(OUT)=3.49
- (E) TO (F) 311'–8" PVC @ 0.40%
- (F) NCDOT SS MANHOLE RIM=11.71 INV(IN)=2.28 (E) INV(IN)=2.25 (S) INV(OUT)=2.25 (W)
- (F) TO (G) 400'–8" PVC @ 0.40%
- (G) NCDOT SS MANHOLE RIM=13.60 INV(IN)=0.65 INV(OUT)=0.62
- (G) TO (H) 400'–8" PVC @ 0.40%
- (H) NCDOT SS MANHOLE RIM=12.71 INV(IN)=–0.98 INV(OUT)=–1.01
- (H) TO (K) 304'–8" PVC @ 0.40%
- (I) NCDOT SS MANHOLE RIM=12.86 INV(OUT)=5.65
- (I) TO (J) 319'–8" PVC @ 0.40%
- (J) NCDOT SS MANHOLE RIM=12.10 INV(IN)=4.38 INV(OUT)=4.35
- (J) TO (K) 319'–8" PVC @ 0.40%
- (K) NCDOT SS MANHOLE RIM=12.00 INV(IN)=3.07 (W) INV(IN)=–2.23 (E) INV(OUT)=–2.28 (S)
- (K) TO (R) 276'–8" PVC @ 0.40%
- (L) NCDOT SS MANHOLE RIM=12.00 INV(OUT)=3.34
- (L) TO (M) 305'–8" PVC @ 0.40%
- (M) NCDOT SS MANHOLE RIM=12.33 INV(IN)=2.12 INV(OUT)=2.09
- (M) TO (Q) 305'–8" PVC @ 0.40%
- (N) NCDOT SS MANHOLE RIM=11.42 INV(OUT)=5.61
- (N) TO (O) 295'–8" PVC @ 0.40%
- (O) NCDOT SS MANHOLE RIM=11.54 INV(IN)=4.43 INV(OUT)=4.40
- (O) TO (Q) 295'–8" PVC @ 0.40%
- (P) NCDOT SS MANHOLE RIM=13.11 INV(IN)=–3.54 INV(OUT)=–3.57
- (P) TO (Q) 203'–8" PVC @ 0.40%
- (Q) NCDOT SS MANHOLE RIM=11.75 INV(IN)=3.22 (E) INV(IN)=0.87 (W) INV(IN)=–4.38 (S) INV(OUT)=–4.41 (N)
- (Q) TO (R) 126'–8" PVC @ 0.40%
- (R) NCDOT SS MANHOLE RIM=12.00 INV(IN)=–3.36 (N) INV(IN)=–4.91 (S) INV(OUT)=–4.94 (W)
- (R) TO (S) 24'–8" PVC @ 0.40%
- (S) NCDOT SS MANHOLE RIM=12.50 INV=–5.04

LEGEND

- ○ IRON PIN FOUND – PIN(F)
- • IRON PIN SET – PIN(S)
- □ CONC. STEEL PIN FOUND – PIN(F)
- ■ CONC. STEEL PIN SET – PIN(S)

UTILITY NOTES:

1. WATER MAINS SHALL BE SDR–21 (200 PSI) PVC, AND WATER SERVICE LINES SHALL BE 1–INCH SDR–9 (200 PSI) CTS TUBING.
2. FIRE HYDRANT LOCATION MARKERS:
   CONTRACTOR SHALL INSTALL AT ALL HYDRANT LOCATIONS A REFLECTIVE HYDRANT MARKER, STIMPSONITE, MODEL 88AB, TWO–WAY BLUE REFLECTOR IN CENTERLINE OF PAVEMENT PERPENDICULAR TO HYDRANT LOCATION USING E–BOND EPOXY ADHESIVE 1240/1241 PER MANUFACTURER'S SPECIFICATIONS
3. VALVE LOCATION MARKERS:
   ALL VALVE LOCATIONS AND BLOW OFFS SHALL BE MARKED WITH A CONCRETE VALVE MARKER WITH A METAL COIN ON TOP SHOWING VALVE SIZE, DISTANCE, AND DIRECTION
4. UNDERGROUND PIPE MARKERS:
   - PLASTIC RIBBON TAPE: ACID– AND ALKALI–RESISTANT POLYETHYLENE FILM WARNING TAPE MANUFACTURED FOR MARKING AND IDENTIFYING UNDERGROUND UTILITIES, 3 INCHES WIDE AND 4 MILS THICK MINIMUM, CONTINUOUSLY INSCRIBED WITH A DESCRIPTION OF THE UTILITY, WITH METALLIC CORE ENCASED IN A PROTECTIVE JACKET FOR CORROSION PROTECTION, DETECTABLE BY METAL DETECTOR WHEN TAPE IS BURIED UP TO 2'–6" DEEP. TAPE SHALL BE ALARMTAPE BY PAUL POTTER ASSOCIATES, DETECTATAPE BY ALLEN SYSTEMS, INC., TERRA TAPE BY GRIFFOLYN CO., INC., OR APPROVED EQUAL
   - COLOR: BLUE
   - TEXT: "CAUTION – WATER LINE BURIED BELOW"
   - DETECTABLE TRACER WIRE: AT ALL LOCATIONS WHERE PRESSURE PIPING IS INSTALLED AND AT LATERAL LOCATIONS, NON–FERROUS OR FERROUS MATERIALS, THE CONTRACTOR SHALL INSTALL A CONTINUOUS LENGTH OF #12 SOLID COPPER WIRE, ON TOP AND PARALLEL TO THE PIPE
5. SERVICE LINES:
   - ALL SERVICE LINES CONNECTING TO 2–INCH WATER MAINS SHALL BE CONNECTED VIA 2–INCH X 1–INCH SADDLE, AY MCDONALD MODEL #3891.
   - ALL SERVICE LINES CONNECTING TO 8–INCH WATER MAINS SHALL BE CONNECTED VIA 1–INCH CORP STOP, AY MCDONALD MODEL #74701T.
6. SERVICE LINE SLEEVES:
   IN THE EVENT A SERVICE LINE MUST CROSS UNDER A CUL–DE–SAC, THE CONTINUOUS LENGTH OF COPPER TUBING MUST BE SLEEVED INSIDE A 2–INCH MINIMUM SDR 35, OR SCH 40 PVC PIPE.

50 0' 50 100

GRAPHIC SCALE
1" = 50'

MSA, P.C.
Environmental Sciences • Planning • Surveying
Civil & Environmental Engineering • Landscape Architecture
5033 Rouse Drive, Virginia Beach, VA 23462
757-490-9264 (Ofc) 757-490-0634 (Fax)
www.msaonline.com

NORTH CAROLINA PROFESSIONAL ENGINEER SEAL 031729 CHRISTOPHER L. SCOTT 09/22/16

DESIGNED	CJL
DRAWN	CJL
CHECKED	CSA
APPROVED	CSA
DATE	09/22/16

NO.	REVISION	DESCRIPTION	BY	DATE

THIS DOCUMENT IS THE SOLE PROPERTY OF MSA, P.C., VIRGINIA BEACH, VA. THE REPRODUCTION OF ANY DETAIL OR DESIGN FOR USE ON ANY PURPOSE OTHER THAN THAT INTENDED BY MSA, P.C. MAY NOT BE MADE WITHOUT THE EXPRESS WRITTEN CONSENT OF MSA, P.C.

LAYOUT AND UTILITIES PLAN
of
COUNTRYSIDE ESTATES SINGLE–FAMILY SUBDIVISION
GPIN 8022–39–7183
(MB 21, PG 85, CHES., VA)
MOYOCK TOWNSHIP CURRITUCK COUNTY, NC

SHEET
C4.4
15 of 43 Sheets

SCALE: 1"=50'

PROJ. NO.: 15021

LEGEND

- ○ IRON PIN FOUND – PIN(F)
- ● IRON PIN SET – PIN(S)
- □ CONC. STEEL PIN FOUND – PIN(F)
- ■ CONC. STEEL PIN SET – PIN(S)

NOTE: SEDIMENT WILL BE REMOVED FROM ALL BMPS PRIOR TO FINAL CONSTRUCTION AND BMPS WILL BE BROUGHT TO ORIGINAL DESIGN

MATCHLINE - SEE SHEET C5.2

GRAPHIC SCALE
1" = 50'

STORM SEWER SCHEDULE

(A1) NCDOT STD BRICK CATCH BASIN RIM=12.00 INV=7.71
(A2) NCDOT STD BRICK CATCH BASIN RIM=12.00 INV=7.25
(A3) NCDOT STD MANHOLE RIM=12.04 INV=6.60
(A4) NCDOT STD DROP INLET RIM=13.30 INV=8.06
(A5) NCDOT STD DROP INLET RIM=12.30 INV=7.82
(A6) NCDOT STD MANHOLE RIM=12.50 INV=4.67
(A7) 36" FES INV=4.50
(A8) (2) NCDOT STD BRICK CATCH BASINS RIM=11.77 INV=5.72
(A9) NCDOT STD BRICK CATCH BASIN RIM=11.77 INV=5.26
(A10) 24" FES INV=4.50
(A11) NCDOT STD BRICK CATCH BASIN RIM=11.85 INV=7.56
(A12) NCDOT STD BRICK CATCH BASIN RIM=11.85 INV=7.10
(A13) 24" FES INV=5.10
(A14) NCDOT STD BRICK CATCH BASIN RIM=11.72 INV=6.93
(A15) NCDOT STD BRICK CATCH BASIN RIM=11.72 INV=6.24
(A16) 15" FES INV=5.10
(B1) 36" FES INV=3.15
(B2) NCDOT STD MANHOLE RIM=12.60 INV=2.92
(B3) NCDOT STD MANHOLE RIM=12.70 INV=2.60
(B4) NCDOT STD MANHOLE RIM=12.55 INV=2.32
(B5) 36" FES INV=2.00
(C1) NCDOT STD BRICK CATCH BASIN RIM=12.04 INV=7.66
(C2) NCDOT STD BRICK CATCH BASIN RIM=12.04 INV=7.20
(C3) NCDOT STD BRICK CATCH BASIN RIM=12.15 INV=5.56

(A1) TO (A2) 24'–18" HDPE @ 1.92%
(A2) TO (A3) 88'–24" HDPE @ 0.74%
(A3) TO (A6) 261'–30" HDPE @ 0.74%
(A4) TO (A6) 113'–15" HDPE @ 3.00%
(A5) TO (A6) 105'–15" HDPE @ 3.00%
(A6) TO (A7) 24'–36" HDPE @ 0.71%
(A8) TO (A9) 24'–18" HDPE @ 1.92%
(A9) TO (A10) 37'–24" HDPE @ 2.05%
(A12) TO (A13) 100'–24" HDPE @ 2.00%
(A14) TO (A15) 24'–12" HDPE @ 3.00%
(A15) TO (A16) 38'–15" HDPE @ 3.00%
(B1) TO (B2) 78'–36" HDPE @ 0.30%
(B2) TO (B3) 105'–36" HDPE @ 0.30%
(B3) TO (B4) 92'–36" HDPE @ 0.30%
(B4) TO (B5) 107'–36" HDPE @ 0.30%
(C1) TO (C2) 24'–18" HDPE @ 1.92%
(C2) TO (C3) 252'–24" HDPE @ 0.65%

NORTH MERIDIAN BASED ON NORTH CAROLINA STATE GRID, NAD '83

SHEET C5.1
16 of 43 Sheets
SCALE: 1"=50'
PROJ. NO.: 15021

GRADING, DRAINAGE, AND EROSION & SEDIMENT CONTROL PLAN
of
COUNTRYSIDE ESTATES SINGLE–FAMILY SUBDIVISION
GPIN 8022–39–7183
(MB 21, PG 85, CHES., VA)
MOYOCK TOWNSHIP CURRITUCK COUNTY, NC

REV. NO.	REV. BY	REVISION DESCRIPTION	REVISION DATE

THIS DOCUMENT IS THE SOLE PROPERTY OF MSA, P.C., VIRGINIA BEACH, VA. THE MODIFICATION OF ANY DETAIL OR DESIGN OR USE FOR ANY PURPOSE OTHER THAN THAT INTENDED BY MSA, P.C. MAY NOT BE MADE WITHOUT THE EXPRESS WRITTEN CONSENT OF MSA, P.C.

DESIGNED CJL
DRAWN CJL
CHECKED CSA
APPROVED CSA
DATE 09/22/16

NORTH CAROLINA PROFESSIONAL SEAL 031728 09/22/16 ENGINEER C. SCOTT ACE

MSA, P.C.
Environmental Sciences • Planning • Surveying
Civil & Environmental Engineering • Landscape Architecture
5033 Rouse Drive, Virginia Beach, VA 23462
757-490-9264 (Ofc) 757-490-0634 (Fax)
www.msaonline.com

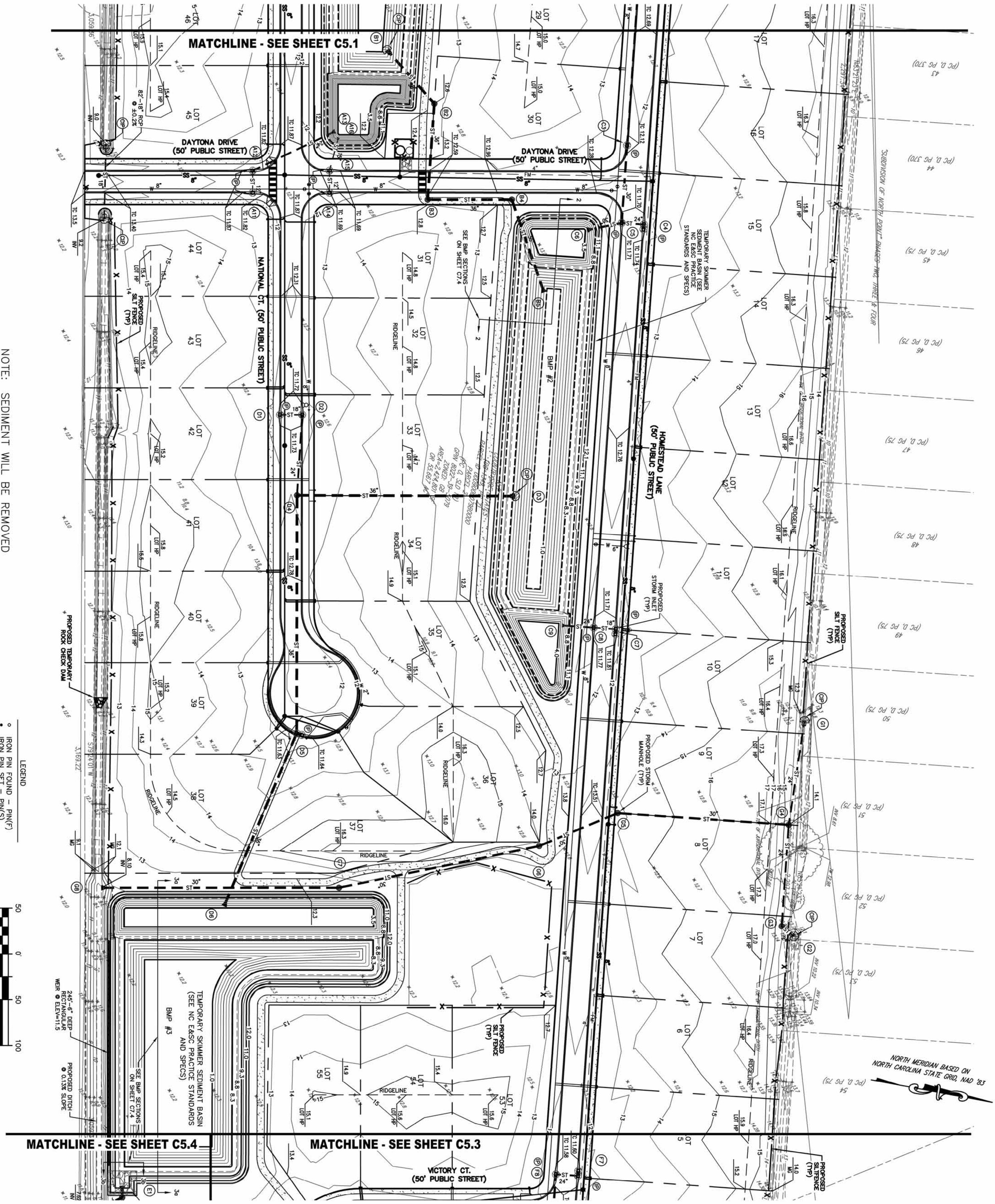

NOTE: SEDIMENT WILL BE REMOVED FROM ALL BMPS PRIOR TO FINAL CONSTRUCTION AND BMPS WILL BE BROUGHT TO ORIGINAL DESIGN

LEGEND

- ○ IRON PIN FOUND – PIN(F)
- ● IRON PIN SET – PIN(S)
- □ CONC. STEEL PIN FOUND – PIN(F)
- ■ CONC. STEEL PIN SET – PIN(S)

STORM SEWER SCHEDULE

(A1) NCDOT STD BRICK CATCH BASIN RIM=12.00
(A1) TO (A2) 24"-18" HDPE @ 1.92% INV=7.71
(A2) NCDOT STD BRICK CATCH BASIN RIM=12.00 INV=7.25
(A2) TO (A3) 88'-24" HDPE @ 0.74% INV=7.25
(A3) NCDOT STD MANHOLE RIM=12.04 INV=6.60
(A3) TO (A6) 261'-30" HDPE @ 0.74%
(A4) NCDOT STD DROP INLET RIM=13.30 INV=8.06
(A4) TO (A6) 113'-15" HDPE @ 3.00%
(A5) NCDOT STD DROP INLET RIM=12.30 INV=7.82
(A5) TO (A6) 105'-15" HDPE @ 3.00%
(A6) NCDOT STD MANHOLE RIM=12.50 INV=4.67
(A6) TO (A7) 24'-36" HDPE @ 0.71%
(A7) 36" FES INV=4.50
(A8) (2) NCDOT STD BRICK CATCH BASINS RIM=11.77 INV=5.72
(A8) TO (A9) 24'-18" HDPE @ 1.92%
(A9) NCDOT STD BRICK CATCH BASIN RIM=11.77 INV=5.26
(A9) TO (A10) 37'-24" HDPE @ 2.05%
(A10) 24" FES INV=4.50
(A11) NCDOT STD BRICK CATCH BASIN RIM=11.85 INV=7.56
(A11) TO (A12) 24'-12" HDPE @ 1.92%
(A12) NCDOT STD BRICK CATCH BASIN RIM=11.85 INV=7.10
(A12) TO (A13) 100'-24" HDPE @ 2.00%
(A13) 24" FES INV=5.10
(A14) NCDOT STD BRICK CATCH BASIN RIM=11.72 INV=6.93
(A14) TO (A15) 24'-12" HDPE @ 3.00%
(A15) NCDOT STD BRICK CATCH BASIN RIM=11.72 INV=6.24
(A13) TO (A16) 38'-15" HDPE @ 3.00%
(A16) 15" FES INV=5.10
(B1) 36" FES INV=3.15
(B1) TO (B2) 78'-36" HDPE @ 0.30%
(B2) NCDOT STD MANHOLE RIM=12.60 INV=2.92
(B2) TO (B3) 105'-36" HDPE @ 0.30%
(B3) NCDOT STD MANHOLE RIM=12.70 INV=2.60
(B3) TO (B4) 92'-36" HDPE @ 0.30%
(B4) NCDOT STD MANHOLE RIM=12.55 INV=2.32
(B4) TO (B5) 107'-36" HDPE @ 0.30%
(B5) 36" FES INV=2.00
(C1) NCDOT STD BRICK CATCH BASIN RIM=12.04 INV=7.66
(C1) TO (C2) 24'-18" HDPE @ 1.92%
(C2) NCDOT STD BRICK CATCH BASIN RIM=12.04 INV=7.20
(C2) TO (C3) 252'-24" HDPE @ 0.65%
(C3) NCDOT STD BRICK CATCH BASIN RIM=12.15 INV=5.56
(C3) TO (C5) 85'-30" HDPE @ 0.86%
(C4) (2) NCDOT STD BRICK CATCH BASINS RIM=11.73 INV=5.49
(C4) TO (C5) 24'-24" HDPE @ 2.75%
(C5) NCDOT STD BRICK CATCH BASIN RIM=11.73 INV=4.83
(C5) TO (C6) 39'-30" HDPE @ 0.85%
(C6) 30" FES INV=4.50
(C7) (2) NCDOT STD BRICK CATCH BASINS RIM=11.65 INV=7.28
(C7) TO (C8) 24'-18" HDPE @ 2.04%
(C8) NCDOT STD BRICK CATCH BASIN RIM=11.73 INV=6.79
(C8) TO (C9) 35'-24" HDPE @ 3.00%
(C9) 24" FES INV=5.74
(D1) NCDOT STD BRICK CATCH BASIN RIM=11.75 INV=7.49
(D1) TO (D2) 24'-18" HDPE @ 2.04%
(D2) NCDOT STD BRICK CATCH BASIN RIM=11.75 INV=7.00
(D2) TO (D4) 88'-24" HDPE @ 0.45%
(D3) 36" FES INV=7.56
(D3) TO (D4) 239'-36" HDPE @ 0.50%
(D4) NCDOT STD MANHOLE RIM=11.90 INV=6.60
(D4) TO (D5) 260'-36" HDPE @ 0.45%
(D5) (2) NCDOT STD BRICK CATCH BASINS RIM=11.63 INV=5.42
(D5) TO (D6) 205'-36" HDPE @ 0.45%
(D6) 36" FES INV=4.50
(G1) 24" FES INV=8.99
(G1) TO (G4) 115'-24" HDPE @ 0.10%
(G2) 24" FES INV=10.36
(G2) TO (G3) 17'-24" HDPE @ 1.17%
(G3) NCDOT STD MANHOLE RIM=14.50 INV=10.16
(G3) TO (G4) 111'-24" HDPE @ 1.16%
(G4) NCDOT STD MANHOLE RIM=14.10 INV=8.87
(G4) TO (G5) 187'-30" HDPE @ 0.10%
(G5) NCDOT STD MANHOLE RIM=13.69 INV=8.70
(G5) TO (G6) 93'-30" HDPE @ 0.10%
(G6) NCDOT STD MANHOLE RIM=13.97 INV=8.60
(G6) TO (G7) 223'-30" HDPE @ 0.10%
(G7) NCDOT STD MANHOLE RIM=12.22 INV=8.37
(G7) TO (G8) 259'-30" HDPE @ 0.10%
(G8) 30" FES INV=8.10
(E1) MULTI-STAGE WEIR SECTION/36" FES UPPER WEIR=9.18 LOWER WEIR=8.80 INV=8.80
(E1) TO (E2) 13'-36" HDPE @ 8.31%
(E2) NCDOT STD MANHOLE RIM=12.05 INV=7.72
(E2) TO (E3) 25'-36" HDPE @ 0.40%
(E3) 36" FES INV=7.62

REV. NO.	REV. BY.	REVISION DESCRIPTION	REVISION DATE

THIS DOCUMENT IS THE SOLE PROPERTY OF MSA, P.C., VIRGINIA BEACH, VA. THE MODIFICATION OF ANY DETAIL OR DESIGN OR USE FOR ANY PURPOSE OTHER THAN THAT INTENDED BY MSA, P.C. MAY NOT BE MADE WITHOUT THE EXPRESS WRITTEN CONSENT OF MSA, P.C.

GRADING, DRAINAGE, AND EROSION & SEDIMENT CONTROL PLAN
of
COUNTRYSIDE ESTATES SINGLE-FAMILY SUBDIVISION
GPIN 8022-39-7183
(MB 21, PG 85, CHES., VA)
MOYOCK TOWNSHIP — CURRITUCK COUNTY, NC

DESIGNED CJL
DRAWN CJL
CHECKED CSA
APPROVED CSA
DATE 09/22/16

NORTH CAROLINA PROFESSIONAL ENGINEER SEAL 031728 09/22/16 SCOTT A. CEY

MSA, P.C.
Environmental Sciences • Planning • Surveying
Civil & Environmental Engineering • Landscape Architecture
5033 Rouse Drive, Virginia Beach, VA 23462
757-490-9264 (Ofc) 757-490-0634 (Fax)
www.msaonline.com

SHEET C5.2
17 of 43 Sheets
SCALE: 1"=50'
PROJ. NO.: 15021

DUAL STORM STRUCTURE BLOWUP (TYPICAL)

NOT TO SCALE

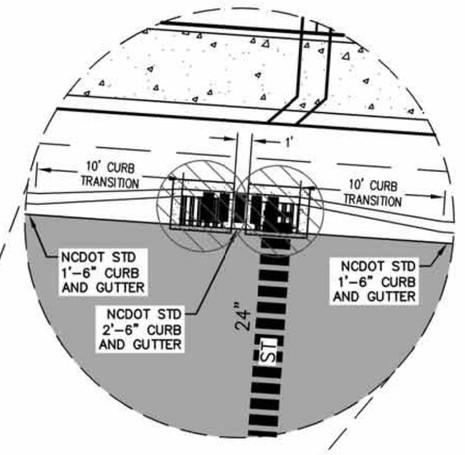

STORM STRUCTURE BLOWUP (TYPICAL)

NOT TO SCALE

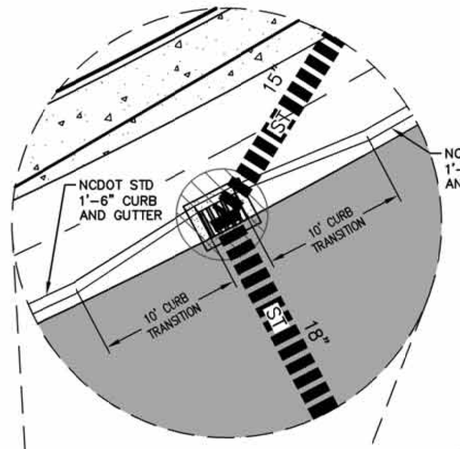

MATCHLINE - SEE SHEET C5.2

LEGEND

- IRON PIN FOUND – PIN(F)
- IRON PIN SET – PIN(S)
- CONC. STEEL PIN FOUND – PIN(F)
- CONC. STEEL PIN SET – PIN(S)

"DE6459"
N 1030981.88
E 2824684.55
NAD83

N/F JOHN W. WHITEHURST, JR. (DB 11, PG E/88) PARCEL ID 0080000070000 (PC M, PG 149) GPIN 8022-59-2719

N/F CALVARY TEMPLE CHURCH (DB 124, PG 564) PARCEL ID 0009000070A0000 PARCEL 1 (PC O, SLD 12) GPIN 8022-59-3321 ZONED: GB AREA=299,800 SF OR 6.882 AC

N/F COUNTRYSIDE ESTATES (DB 1, PG 7) PARCEL ID 0010000070B0000 PARCEL 2 (PC O, SLD 12) GPIN 8022-59-5079 ZONED: GB AREA=2,424,801 SF OR 36.667 AC

PROPOSED SILTFENCE (TYP)

PROPOSED SILT FENCE (TYP)

OPEN SPACE (DC 6, PG 7)

TOE OF JURISDICTIONAL DITCH

POND

RIDGELINE

TEMPORARY STOCKPILE / STAGING AREA (100'X200')

HOMESTEAD LANE (50' PUBLIC STREET)

HOMESTEAD LANE (50' PUBLIC ROW)

PROPOSED SILTFENCE (TYP)

TEMPORARY GRAVEL CONSTRUCTION ENTRANCE 50'X12'

VICTORY CT. (50' PUBLIC STREET)

VICTORY CT. (50' PUBLIC STREET)

SEE BMP SECTIONS ON SHEET C7.4

TEMPORARY SKIMMER SEDIMENT BASIN (SEE NC E&SC PRACTICE STANDARDS AND SPECS)

PROPOSED SILTFENCE (TYP)

PROPOSED STORM INLET (TYP)

BMP #4

GRASSY AREA

BROKEN ASPHALT

NORTH CAROLINA STATE ROUTE 168 – CARATOKE HIGHWAY (100' RIGHT-OF-WAY)

NORTH MERIDIAN BASED ON NORTH CAROLINA STATE GRID, NAD '83

MATCHLINE - SEE SHEET C5.4

LOT 1, LOT 2, LOT 3, LOT 4, LOT 5, LOT 56, LOT 57, LOT 58, LOT 59, LOT 60, LOT 61, LOT 62

50 0' 50 100

GRAPHIC SCALE
1" = 50'

NOTE: SEDIMENT WILL BE REMOVED FROM ALL BMPS PRIOR TO FINAL CONSTRUCTION AND BMPS WILL BE BROUGHT TO ORIGINAL DESIGN

STORM SEWER SCHEDULE

- F1 NCDOT STD BRICK CATCH BASIN RIM=13.40 INV=9.70
- F1 TO F2 71'–12" HDPE @ 0.63%
- F2 NCDOT STD BRICK CATCH BASIN RIM=13.47 INV=9.25
- F2 TO F3 412'–15" HDPE @ 0.60%
- F3 NCDOT STD DROP INLET RIM=11.25 INV=6.78
- F3 TO F4 101'–15" HDPE @ 1.02%
- F4 NCDOT STD BRICK CATCH BASIN RIM=11.58 INV=5.75
- F4 TO F5 24'–18" HDPE @ 1.00%
- F5 NCDOT STD BRICK CATCH BASIN RIM=11.58 INV=5.52
- F5 TO F6 51'–24" HDPE @ 1.02%
- F6 24" FES INV=5.00
- F7 (2) NCDOT STD BRICK CATCH BASINS RIM=11.60 INV=6.71
- F7 TO F8 24'–24" HDPE @ 1.92%
- F8 NCDOT STD BRICK CATCH BASIN RIM=11.60 INV=6.25
- F8 TO F9 96'–30" HDPE @ 0.52%
- F9 NCDOT STD BRICK CATCH BASIN RIM=12.08 INV=5.75
- F9 TO F10 338'–30" HDPE @ 0.52%
- F10 30" FES INV=4.00
- F11 NCDOT STD BRICK CATCH BASIN RIM=11.90 INV=7.50
- F11 TO F12 24'–15" HDPE @ 1.50%
- F12 NCDOT STD BRICK CATCH BASIN RIM=11.90 INV=7.14
- F12 TO F14 260'–24" HDPE @ 0.40%
- F13 NCDOT STD BRICK CATCH BASIN RIM=11.78 INV=7.41
- F13 TO F14 66'–12" HDPE @ 1.97%
- F14 NCDOT STD BRICK CATCH BASIN RIM=11.78 INV=6.11 (N,W) INV=5.02 (E)
- F14 TO F15 51'–30" HDPE @ 2.00%
- F15 30" FES INV=4.00
- F16 MULTI–STAGE WEIR SECTION/36" FES UPPER WEIR=9.06 LOWER WEIR=8.60 INV=8.60
- F16 TO F17 12'–36" HDPE @ 2.50%
- F17 NCDOT STD MANHOLE RIM=12.10 INV=8.30
- F17 TO F18 30'–36" HDPE @ 0.20%
- F18 NCDOT STD MANHOLE RIM=12.40 INV=8.24
- F18 TO F19 318'–36" HDPE @ 0.21%
- F19 36" FES INV=7.57
- H1 36" FES (2) INV=7.55
- H1 TO H2 25' TWIN–36" HDPE @ 0.18%
- H2 36" FES (2) INV=7.50
- I1 NCDOT STD BRICK CATCH BASIN RIM=11.82 INV=9.23
- I1 TO I2 12'–15" RCP @ 0.95%
- I2 CONNECT PROPOSED 15" RCP TO EXISTING 15" RCP @ INV=9.12 (MATCH EXISTING)

MSA, P.C.
Environmental Sciences • Planning • Surveying
Civil & Environmental Engineering • Landscape Architecture
5033 Rouse Drive, Virginia Beach, VA 23462
757-490-9264 (OfE) 757-490-0634 (Fax)
www.msaonline.com

NORTH CAROLINA PROFESSIONAL ENGINEER SEAL 037291 CHRISTOPHER M. SCOTT 09/22/16

DESIGNED	CJL
DRAWN	CJL
CHECKED	CSA
APPROVED	CSA
DATE	09/22/16

REVISIONS

REV. NO.	DATE	DESCRIPTION

THIS DOCUMENT IS THE SOLE PROPERTY OF MSA, P.C., VIRGINIA BEACH, VA. THE REPRODUCTION OF ANY DETAIL OR DESIGN OR USE OF THIS DOCUMENT FOR ANY PURPOSE OTHER THAN THAT INTENDED BY MSA, P.C. MAY NOT BE MADE WITHOUT THE EXPRESS WRITTEN CONSENT OF MSA, P.C.

GRADING, DRAINAGE, AND EROSION & SEDIMENT CONTROL PLAN
of
COUNTRYSIDE ESTATES SINGLE–FAMILY SUBDIVISION
GPIN 8022–39–7183
(MB 21, PG 85, CHES., VA)
MOYOCK TOWNSHIP CURRITUCK COUNTY, NC

SHEET
C5.3
18 of 43 Sheets

SCALE: 1"=50'

PROJ. NO.: 15021

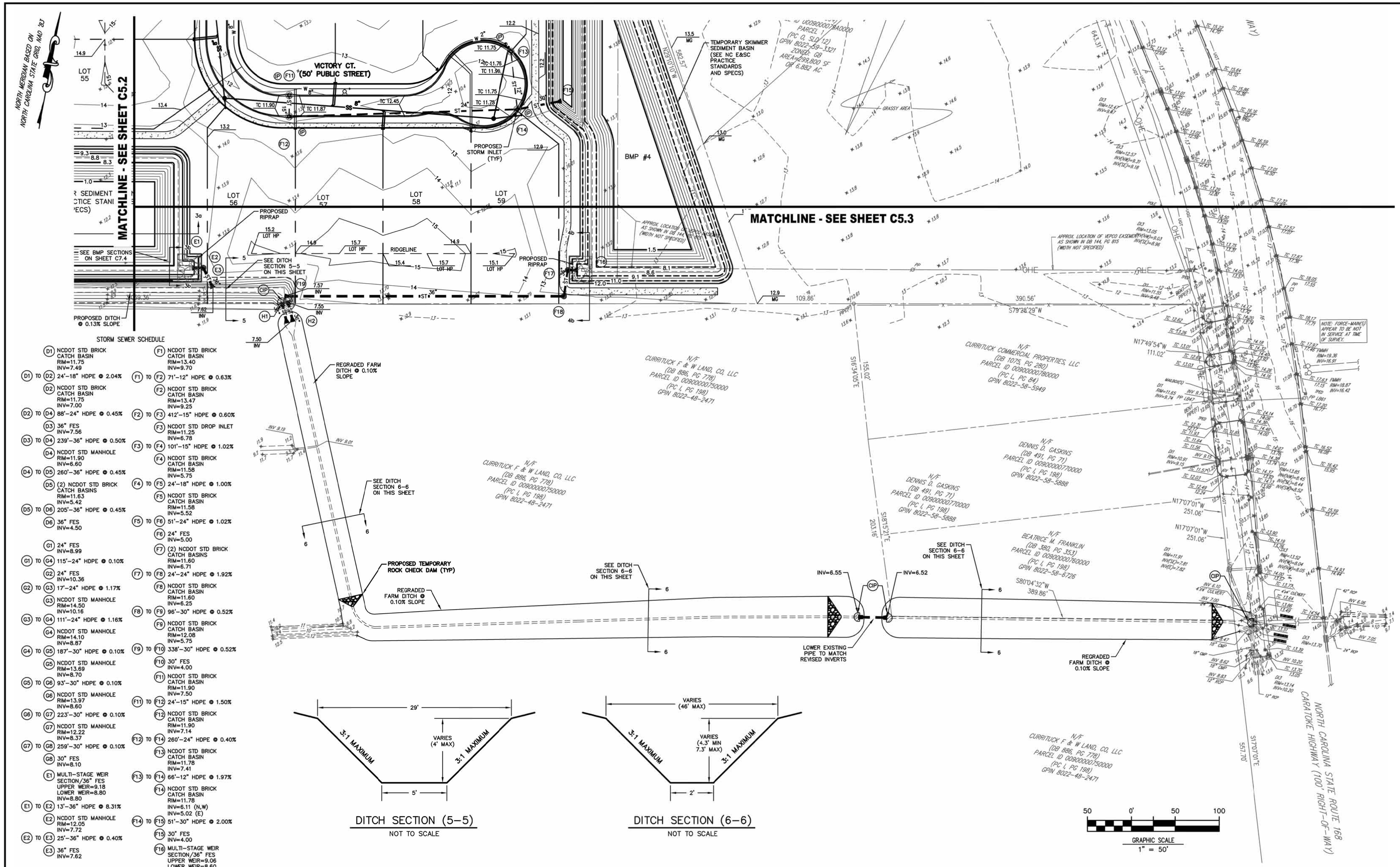

STORM SEWER SCHEDULE

- D1 NCDOT STD BRICK CATCH BASIN RIM=11.75 INV=7.49
- D1 TO D2 24"–18" HDPE @ 2.04%
- D2 NCDOT STD BRICK CATCH BASIN RIM=11.75 INV=7.00
- D2 TO D4 88'–24" HDPE @ 0.45%
- D3 36" FES INV=7.56
- D3 TO D4 239'–36" HDPE @ 0.50%
- D4 NCDOT STD MANHOLE RIM=11.90 INV=6.60
- D4 TO D5 260'–36" HDPE @ 0.45%
- D5 (2) NCDOT STD BRICK CATCH BASINS RIM=11.63 INV=5.42
- D5 TO D6 205'–36" HDPE @ 0.45%
- D6 36" FES INV=4.50
- G1 24" FES INV=8.99
- G1 TO G4 115'–24" HDPE @ 0.10%
- G2 24" FES INV=10.36
- G2 TO G3 17'–24" HDPE @ 1.17%
- G3 NCDOT STD MANHOLE RIM=14.50 INV=10.16
- G3 TO G4 111'–24" HDPE @ 1.16%
- G4 NCDOT STD MANHOLE RIM=14.10 INV=8.87
- G4 TO G5 187'–30" HDPE @ 0.10%
- G5 NCDOT STD MANHOLE RIM=13.69 INV=8.70
- G5 TO G6 93'–30" HDPE @ 0.10%
- G6 NCDOT STD MANHOLE RIM=13.97 INV=8.60
- G6 TO G7 223'–30" HDPE @ 0.10%
- G7 NCDOT STD MANHOLE RIM=12.22 INV=8.37
- G7 TO G8 259'–30" HDPE @ 0.10%
- G8 30" FES INV=8.10
- E1 MULTI-STAGE WEIR SECTION/36" FES UPPER WEIR=9.18 LOWER WEIR=8.80 INV=8.80
- E1 TO E2 13'–36" HDPE @ 8.31%
- E2 NCDOT STD MANHOLE RIM=12.05 INV=7.72
- E2 TO E3 25'–36" HDPE @ 0.40%
- E3 36" FES INV=7.62
- F1 NCDOT STD BRICK CATCH BASIN RIM=13.40 INV=9.70
- F1 TO F2 71'–12" HDPE @ 0.63%
- F2 NCDOT STD BRICK CATCH BASIN RIM=13.47 INV=9.25
- F2 TO F3 412'–15" HDPE @ 0.60%
- F3 NCDOT STD DROP INLET RIM=11.25 INV=6.78
- F3 TO F4 101'–15" HDPE @ 1.02%
- F4 NCDOT STD BRICK CATCH BASIN RIM=11.58 INV=5.75
- F4 TO F5 24'–18" HDPE @ 1.00%
- F5 NCDOT STD BRICK CATCH BASIN RIM=11.58 INV=5.52
- F5 TO F6 51'–24" HDPE @ 1.02%
- F6 24" FES INV=5.00
- F7 (2) NCDOT STD BRICK CATCH BASINS RIM=11.60 INV=6.71
- F7 TO F8 24'–24" HDPE @ 1.92%
- F8 NCDOT STD BRICK CATCH BASIN RIM=11.60 INV=6.25
- F8 TO F9 96'–30" HDPE @ 0.52%
- F9 NCDOT STD BRICK CATCH BASIN RIM=12.08 INV=5.75
- F9 TO F10 338'–30" HDPE @ 0.52%
- F10 30" FES INV=4.00
- F11 NCDOT STD BRICK CATCH BASIN RIM=11.90 INV=7.50
- F11 TO F12 24'–15" HDPE @ 1.50%
- F12 NCDOT STD BRICK CATCH BASIN RIM=11.90 INV=7.14
- F12 TO F14 260'–24" HDPE @ 0.40%
- F13 NCDOT STD BRICK CATCH BASIN RIM=11.78 INV=7.41
- F13 TO F14 66'–12" HDPE @ 1.97%
- F14 NCDOT STD BRICK CATCH BASIN RIM=11.78 INV=6.11 (N,W) INV=5.02 (E)
- F14 TO F15 51'–30" HDPE @ 2.00%
- F15 30" FES INV=4.00
- F16 MULTI-STAGE WEIR SECTION/36" FES UPPER WEIR=9.06 LOWER WEIR=8.60 INV=8.60
- F16 TO F17 12'–36" HDPE @ 2.50%
- F17 NCDOT STD MANHOLE RIM=12.10 INV=8.30
- F17 TO F18 30'–36" HDPE @ 0.20%
- F18 NCDOT STD MANHOLE RIM=12.40 INV=8.24
- F18 TO F19 318'–36" HDPE @ 0.21%
- F19 36" FES INV=7.57
- H1 36" FES (2) INV=7.55
- H1 TO H2 25' TWIN–36" HDPE @ 0.18%
- H2 36" FES (2) INV=7.50

DITCH SECTION (5–5)
NOT TO SCALE

DITCH SECTION (6–6)
NOT TO SCALE

NOTE: SEDIMENT WILL BE REMOVED FROM ALL BMPS AND CHANNELS PRIOR TO FINAL CONSTRUCTION AND BMPS WILL BE BROUGHT TO ORIGINAL DESIGN

MSA, P.C.
Environmental Sciences • Planning • Surveying
Civil & Environmental Engineering • Landscape Architecture
5033 Rouse Drive, Virginia Beach, VA 23462
757-490-9264 (OfC) 757-490-0634 (Fax)
www.msaonline.com

NORTH CAROLINA PROFESSIONAL ENGINEER SEAL 037291 DAVID C. SCOTT 09/22/16

REVISIONS	DESIGNED	C.H.
	DRAWN	C.H.
	CHECKED	CSA
	APPROVED	CSA
	DATE	09/22/16

REVISION DESCRIPTION

THIS DOCUMENT IS THE SOLE PROPERTY OF MSA, P.C., VIRGINIA BEACH, VA. THE REPRODUCTION OF ANY DETAIL OR DESIGN IN THIS DOCUMENT IN WHOLE OR IN PART IS STRICTLY PROHIBITED EXCEPT WHEN SPECIFICALLY AUTHORIZED IN WRITING BY MSA, P.C. AND THEN ONLY FOR THE USE SPECIFIED IN THE AUTHORIZATION. ANY REUSE OF THESE PLANS FOR OTHER THAN THE SPECIFIED PURPOSE WITHOUT THE EXPRESS WRITTEN CONSENT OF MSA, P.C. SHALL BE WITHOUT LIABILITY TO MSA, P.C. AND MSA, P.C. SHALL BE INDEMNIFIED AND HELD HARMLESS FOR ANY DAMAGES RESULTING THEREFROM.

GRADING, DRAINAGE, AND EROSION & SEDIMENT CONTROL PLAN
of
COUNTRYSIDE ESTATES SINGLE-FAMILY SUBDIVISION
GPIN 8022-39-7183
(MB 21, PG 85, CHES., VA)
MOYOCK TOWNSHIP CURRITUCK COUNTY, NC

SHEET C5.4
19 of 43 Sheets

SCALE: 1"=50'

PROJ. NO.: 15021

BMP #1

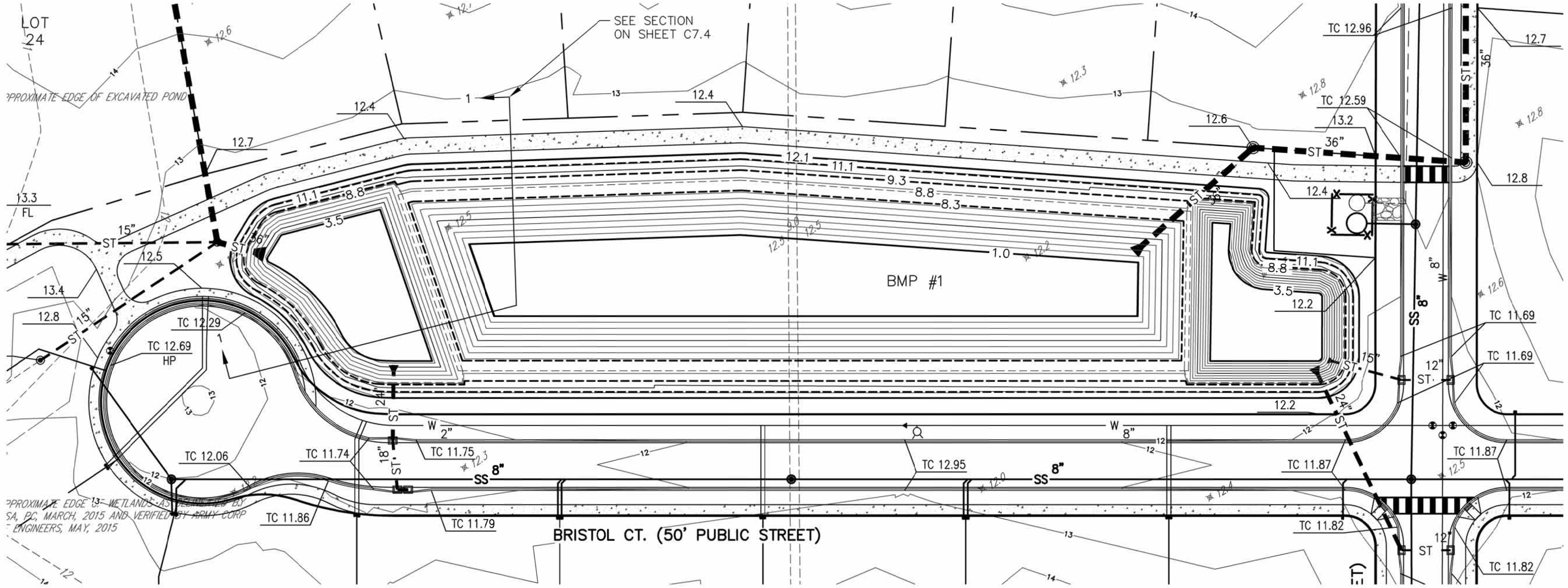

BMP #2

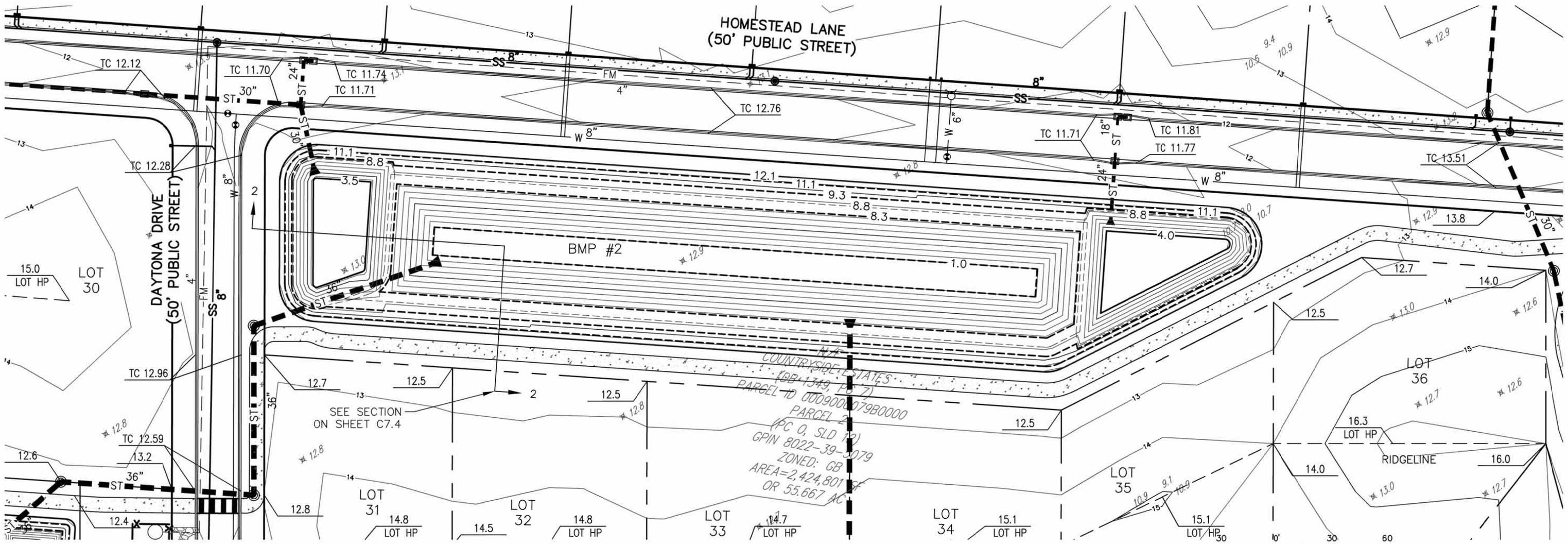

MSA, P.C.
Environmental Sciences • Planning • Surveying
Civil & Environmental Engineering • Landscape Architecture
5033 Rouse Drive, Virginia Beach, VA 23462
757-490-9264 (OFc) 757-490-0634 (Fax)
www.msaonline.com

NORTH CAROLINA PROFESSIONAL ENGINEER SEAL 031729 09/22/16 REGISTERED CHRISTOPHER S. SCOTT

DESIGNED	CJL	
DRAWN	CJL	
CHECKED	CSA	
APPROVED	CSA	
DATE		09/22/16

NO.	DATE	REVISION	DESCRIPTION

THIS DOCUMENTS IS THE SOLE PROPERTY OF MSA, P.C., VIRGINIA BEACH, VA. THE MODIFICATION OF ANY DETAIL OR DESIGN OR USE FOR ANY PURPOSE OTHER THAN THAT INTENDED BY MSA, P.C. MAY NOT BE MADE WITHOUT THE EXPRESS WRITTEN CONSENT OF MSA, P.C.

ENLARGED BMP PLAN of
COUNTRYSIDE ESTATES SINGLE-FAMILY SUBDIVISION
GPIN 8022-39-7183
(MB 21, PG 85, CHES., VA)
MOYOCK TOWNSHIP CURRITUCK COUNTY, NC

SHEET C5.5
20 of 43 Sheets
SCALE: 1"=30'
PROJ. NO.: 15021

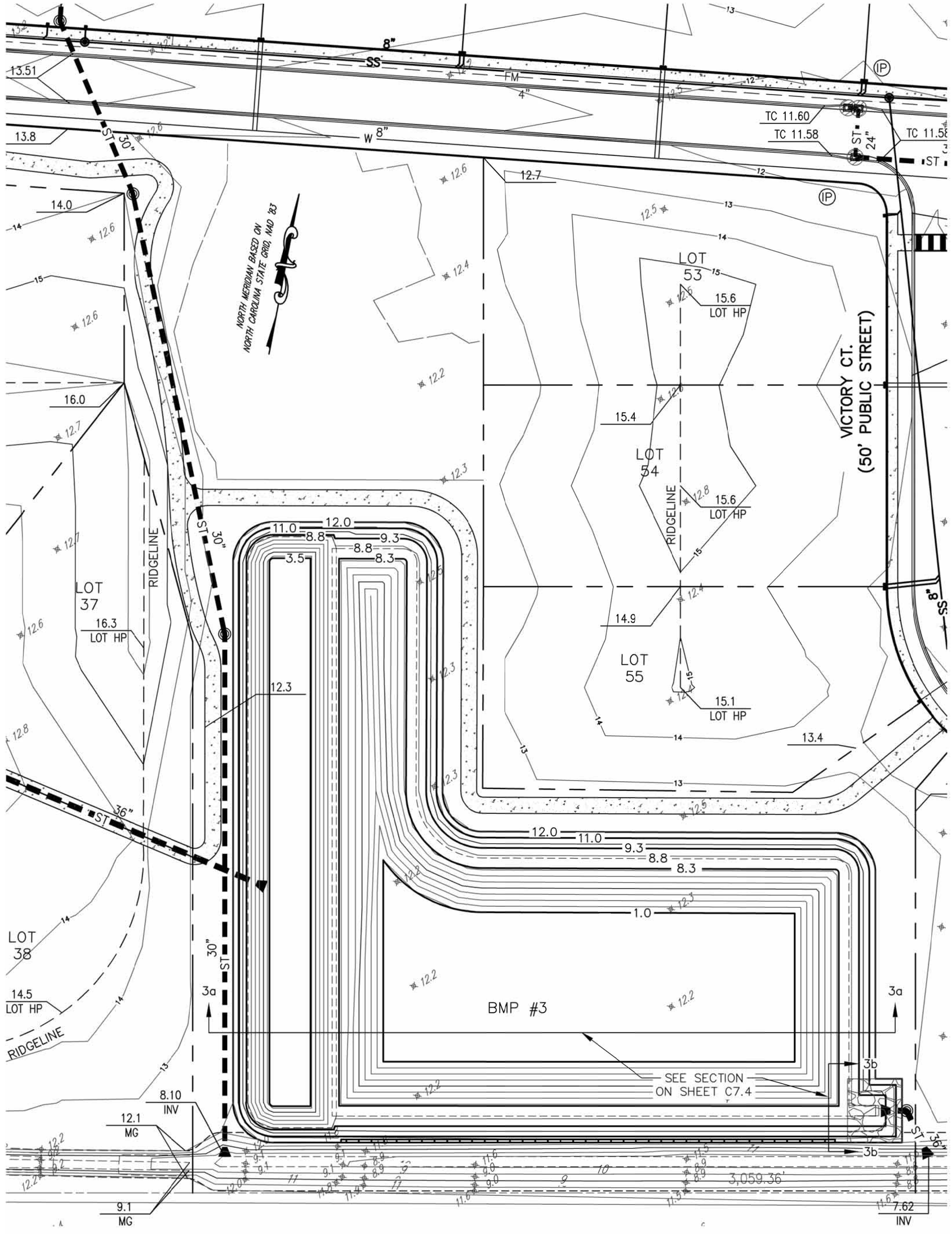

BMP #3

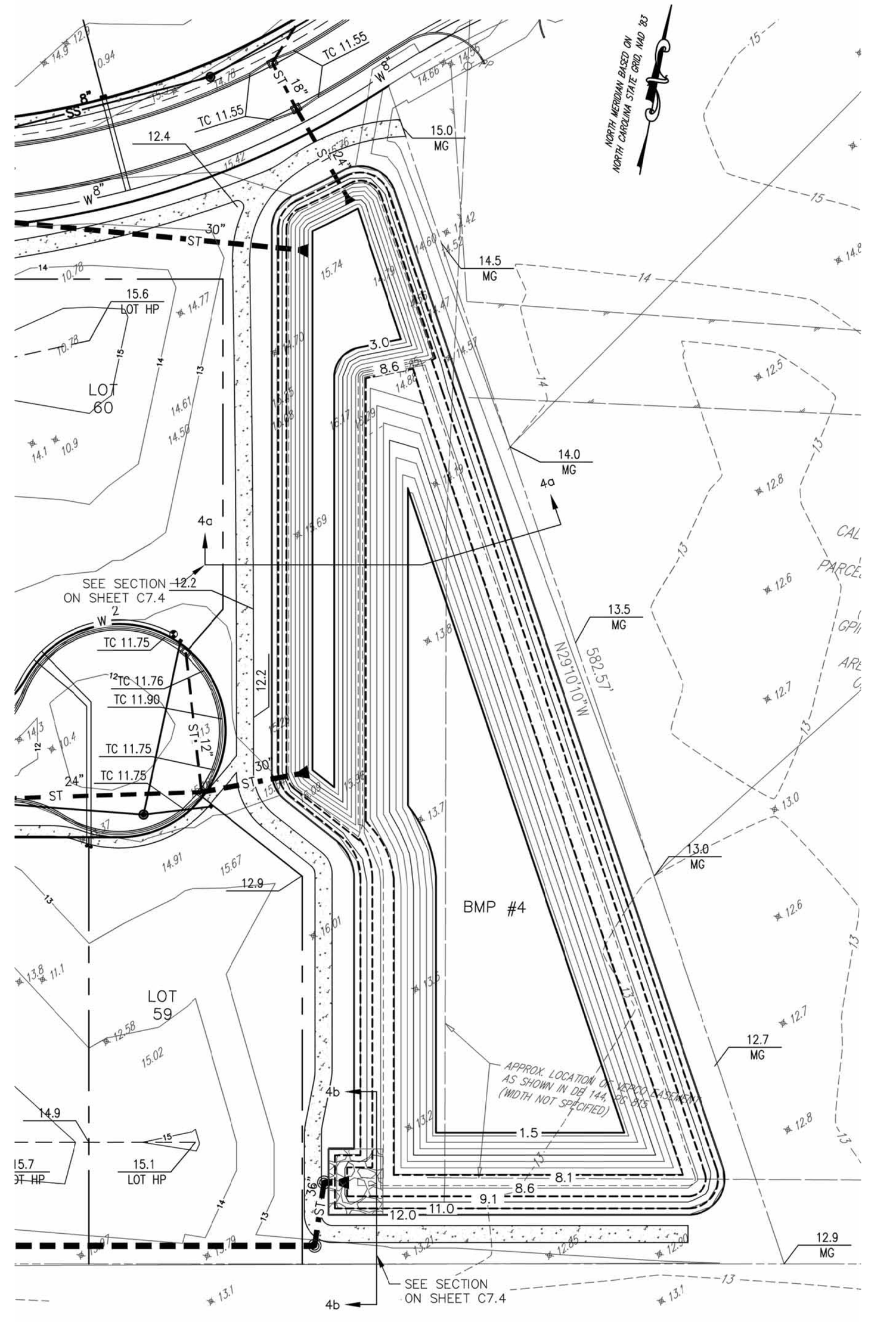

BMP #4

GRAPHIC SCALE 1" = 30'

MSA, P.C.
Environmental Sciences • Planning • Surveying
Civil & Environmental Engineering • Landscape Architecture
5033 Rouse Drive, Virginia Beach, VA 23462
757-490-9264 (Ofc) 757-490-0634 (Fax)
www.msaonline.com

NORTH CAROLINA PROFESSIONAL ENGINEER SEAL 031728 09/22/16 C. SCOTT ARCH

DESIGNED	CJL
DRAWN	CJL
CHECKED	CSA
APPROVED	CSA
DATE	09/22/16

REVISION DATE | REV. NO. | REV. BY | REVISION DESCRIPTION

THIS DOCUMENT IS THE SOLE PROPERTY OF MSA, P.C., VIRGINIA BEACH, VA. THE REPRODUCTION OF ANY DETAIL OR DESIGN OR USE FOR ANY PURPOSE OTHER THAN THAT INTENDED BY MSA, P.C. MAY NOT BE MADE WITHOUT THE EXPRESS WRITTEN CONSENT OF MSA, P.C.

ENLARGED BMP PLAN
of
COUNTRYSIDE ESTATES SINGLE-FAMILY SUBDIVISION
GPIN 8022-39-7183
(MB 21, PG 85, CHES., VA)
MOYOCK TOWNSHIP
CURRITUCK COUNTY, NC

SHEET
C5.6
21 of 43 Sheets

SCALE: 1"=30'

PROJ. NO.: 15021

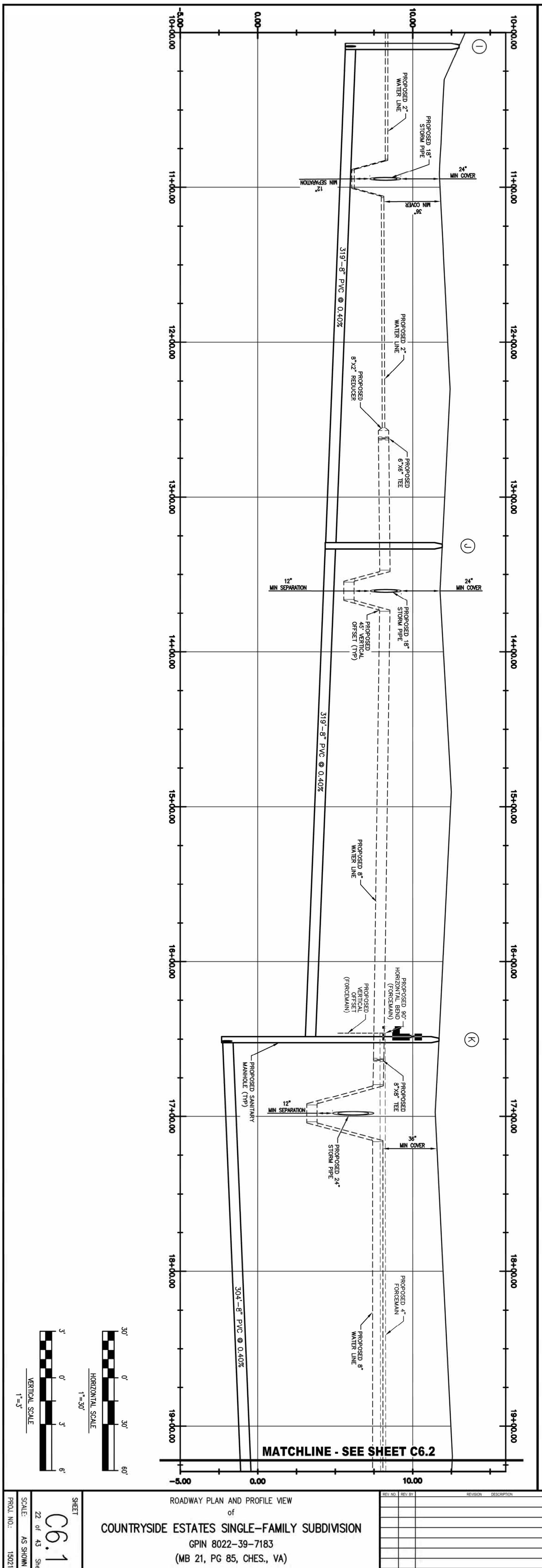

ROADWAY PLAN AND PROFILE VIEW
of
COUNTRYSIDE ESTATES SINGLE-FAMILY SUBDIVISION
GPIN 8022-39-7183
(MB 21, PG 85, CHES., VA)
MOYOCK TOWNSHIP — CURRITUCK COUNTY, NC

SHEET C6.1
22 of 43 Sheets
SCALE: AS SHOWN
PROJ. NO.: 15021

REV. NO.	REV. BY	REVISION DESCRIPTION	REVISION DATE

THIS DOCUMENT IS THE SOLE PROPERTY OF MSA, P.C., VIRGINIA BEACH, VA. THE MODIFICATION OF ANY DETAIL OR DESIGN OR USE FOR ANY PURPOSE OTHER THAN THAT INTENDED BY MSA, P.C. MAY NOT BE MADE WITHOUT THE EXPRESS WRITTEN CONSENT OF MSA, P.C.

DESIGNED	CJL
DRAWN	CJL
CHECKED	CSA
APPROVED	CSA
DATE	09/22/16

NORTH CAROLINA PROFESSIONAL ENGINEER SEAL 031728 09/22/16 C. SCOTT ACEY

MSA, P.C.
Environmental Sciences • Planning • Surveying
Civil & Environmental Engineering • Landscape Architecture
5033 Rouse Drive, Virginia Beach, VA 23462
757-490-9264 (Ofc) 757-490-0634 (Fax)
www.msaonline.com

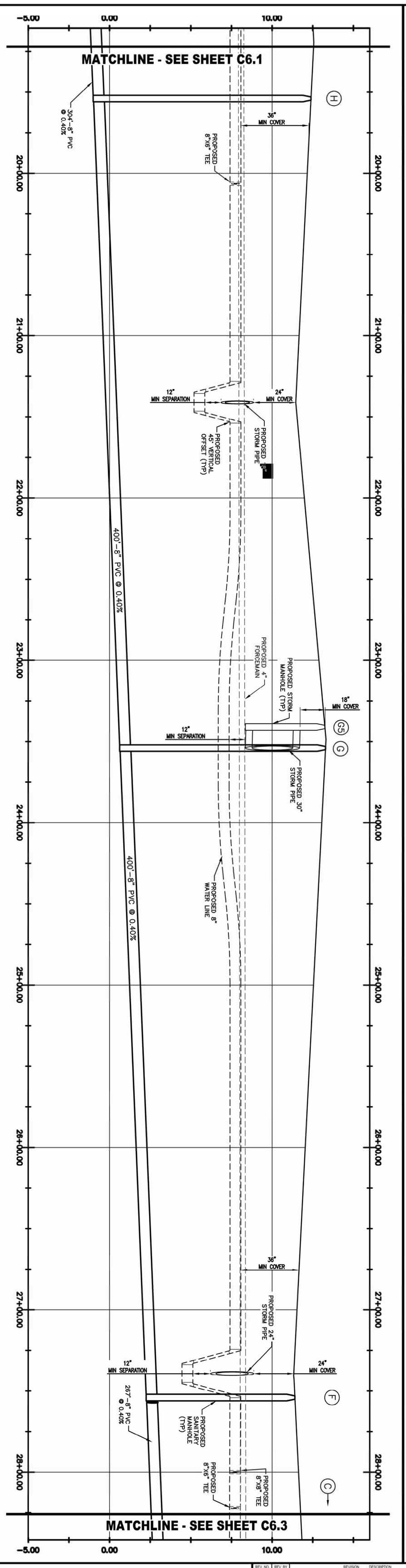

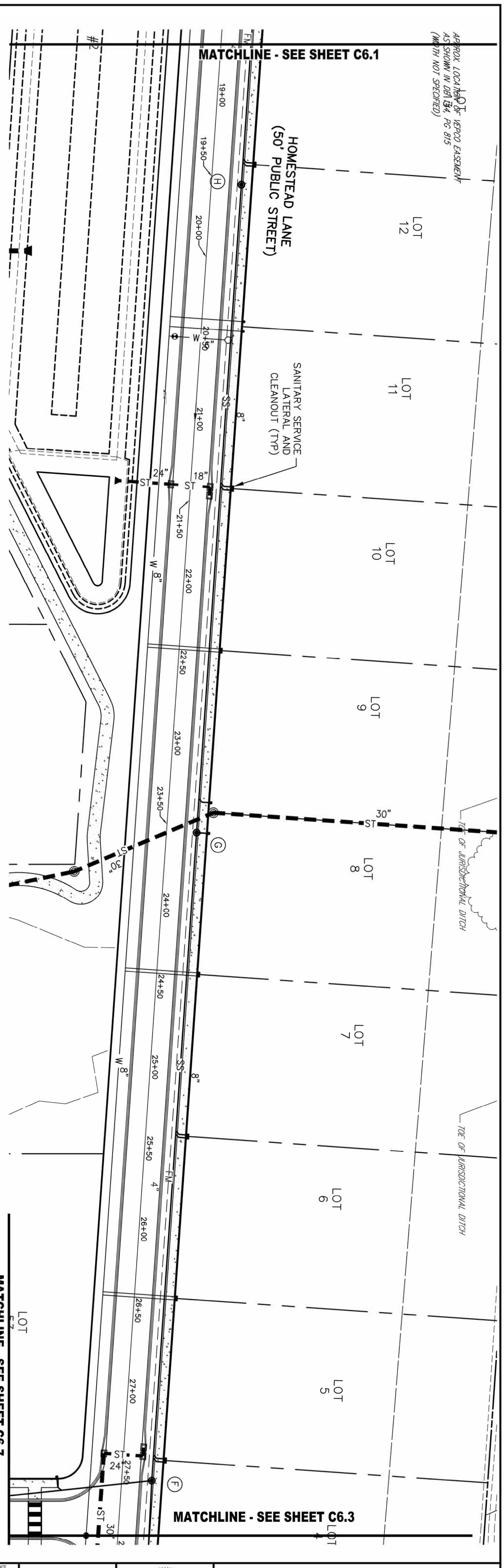

ROADWAY PLAN AND PROFILE VIEW
of
COUNTRYSIDE ESTATES SINGLE-FAMILY SUBDIVISION
GPIN 8022-39-7183
(MB 21, PG 85, CHES., VA)
MOYOCK TOWNSHIP — CURRITUCK COUNTY, NC

SHEET C6.2 23 of 43 Sheets
SCALE: AS SHOWN
PROJ. NO.: 15021

REV. NO.	REV. BY.	REVISION DESCRIPTION	REVISION DATE

THIS DOCUMENT IS THE SOLE PROPERTY OF MSA, P.C., VIRGINIA BEACH, VA. THE MODIFICATION OF ANY DETAIL OR DESIGN OR USE FOR ANY PURPOSE OTHER THAN THAT INTENDED BY MSA, P.C. MAY NOT BE MADE WITHOUT THE EXPRESS WRITTEN CONSENT OF MSA, P.C.

DESIGNED	CJL
DRAWN	CJL
CHECKED	CSA
APPROVED	CSA
DATE	09/22/16

NORTH CAROLINA PROFESSIONAL ENGINEER SEAL 031728 09/22/16 C. SCOTT ACREE

MSA, P.C.
Environmental Sciences • Planning • Surveying
Civil & Environmental Engineering • Landscape Architecture
5033 Rouse Drive, Virginia Beach, VA 23462
757-490-9264 (Ofc) 757-490-0634 (Fax)
www.msaonline.com

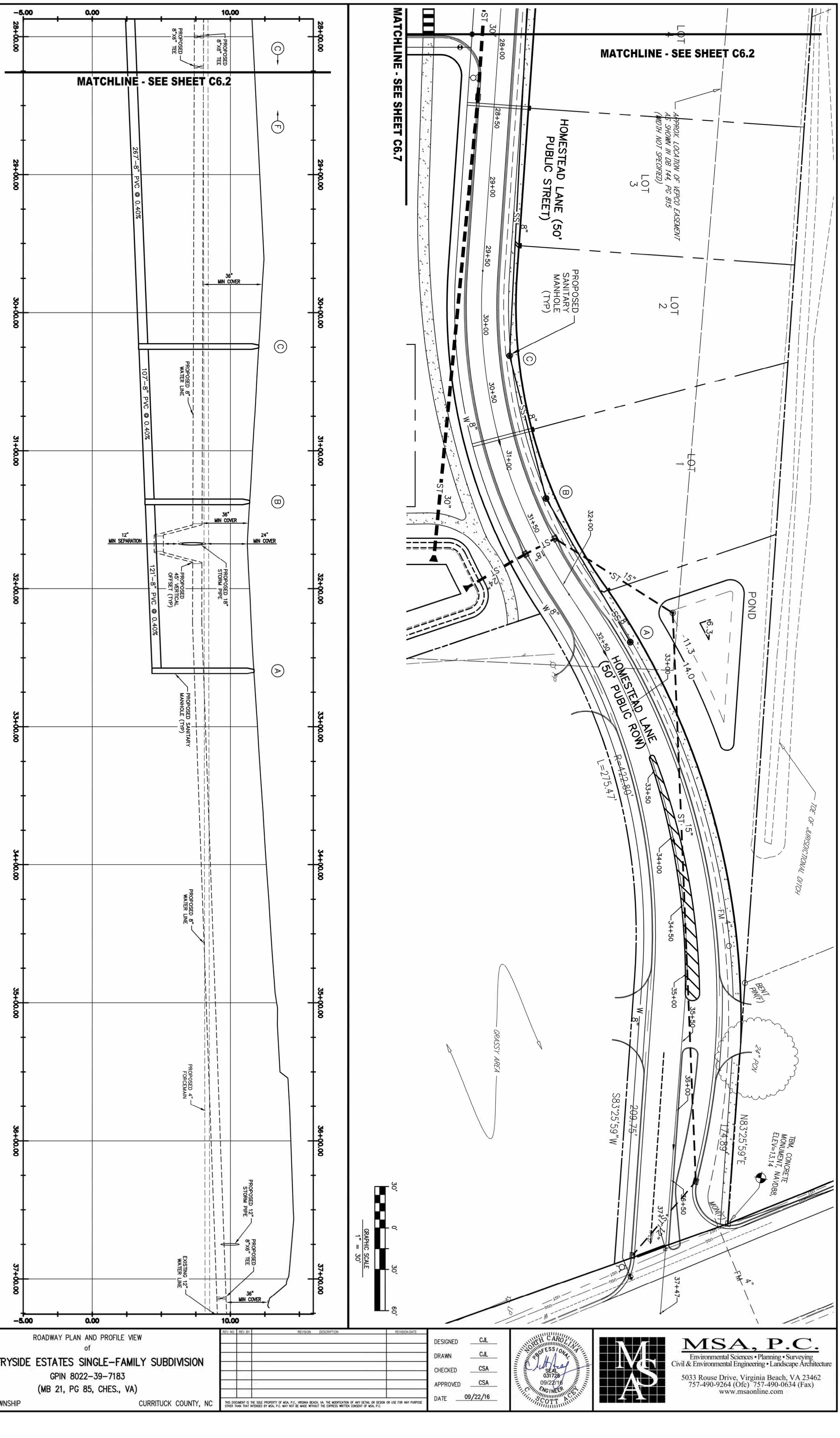

ROADWAY PLAN AND PROFILE VIEW
of
COUNTRYSIDE ESTATES SINGLE-FAMILY SUBDIVISION
GPIN 8022-39-7183
(MB 21, PG 85, CHES., VA)
MOYOCK TOWNSHIP — CURRITUCK COUNTY, NC

SHEET C6.3 — 24 of 43 Sheets
SCALE: AS SHOWN
PROJ. NO.: 15021

REV. NO.	REV. BY.	REVISION DESCRIPTION	REVISION DATE

THIS DOCUMENT IS THE SOLE PROPERTY OF MSA, P.C., VIRGINIA BEACH, VA. THE MODIFICATION OF ANY DETAIL OR DESIGN OR USE FOR ANY PURPOSE OTHER THAN THAT INTENDED BY MSA, P.C. MAY NOT BE MADE WITHOUT THE EXPRESS WRITTEN CONSENT OF MSA, P.C.

DESIGNED	CJL
DRAWN	CJL
CHECKED	CSA
APPROVED	CSA
DATE	09/22/16

NORTH CAROLINA PROFESSIONAL ENGINEER SEAL 031728 09/22/16 C. SCOTT ACEY

MSA, P.C.
Environmental Sciences • Planning • Surveying
Civil & Environmental Engineering • Landscape Architecture
5033 Rouse Drive, Virginia Beach, VA 23462
757-490-9264 (Ofc) 757-490-0634 (Fax)
www.msaonline.com

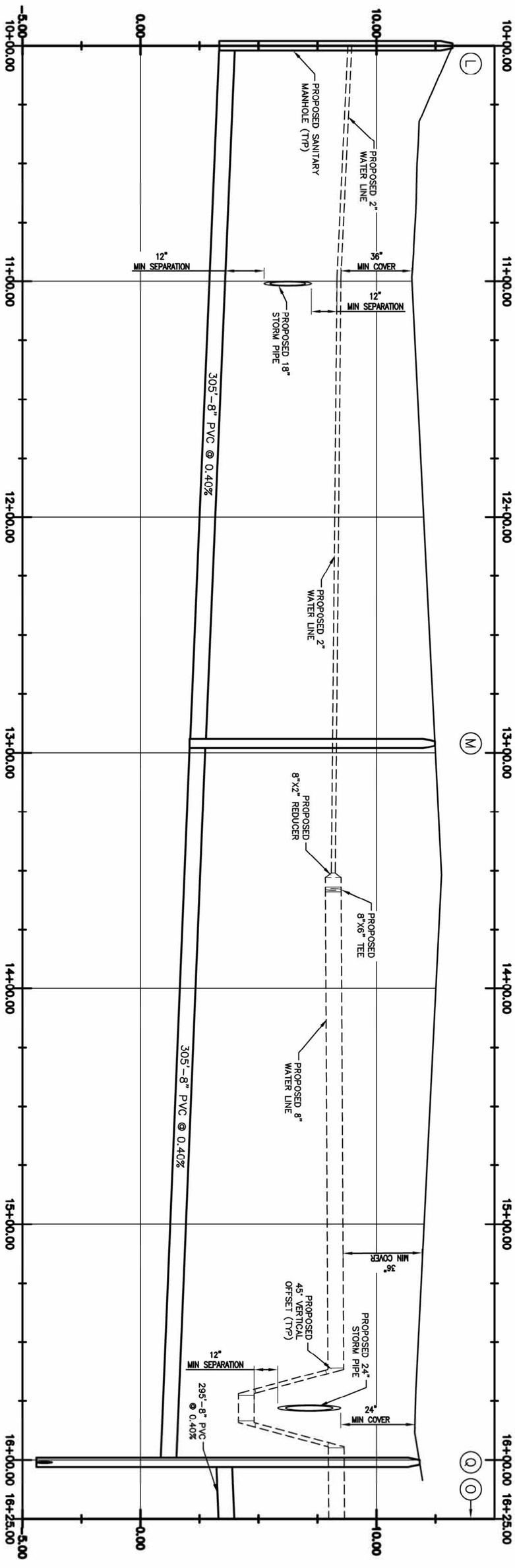

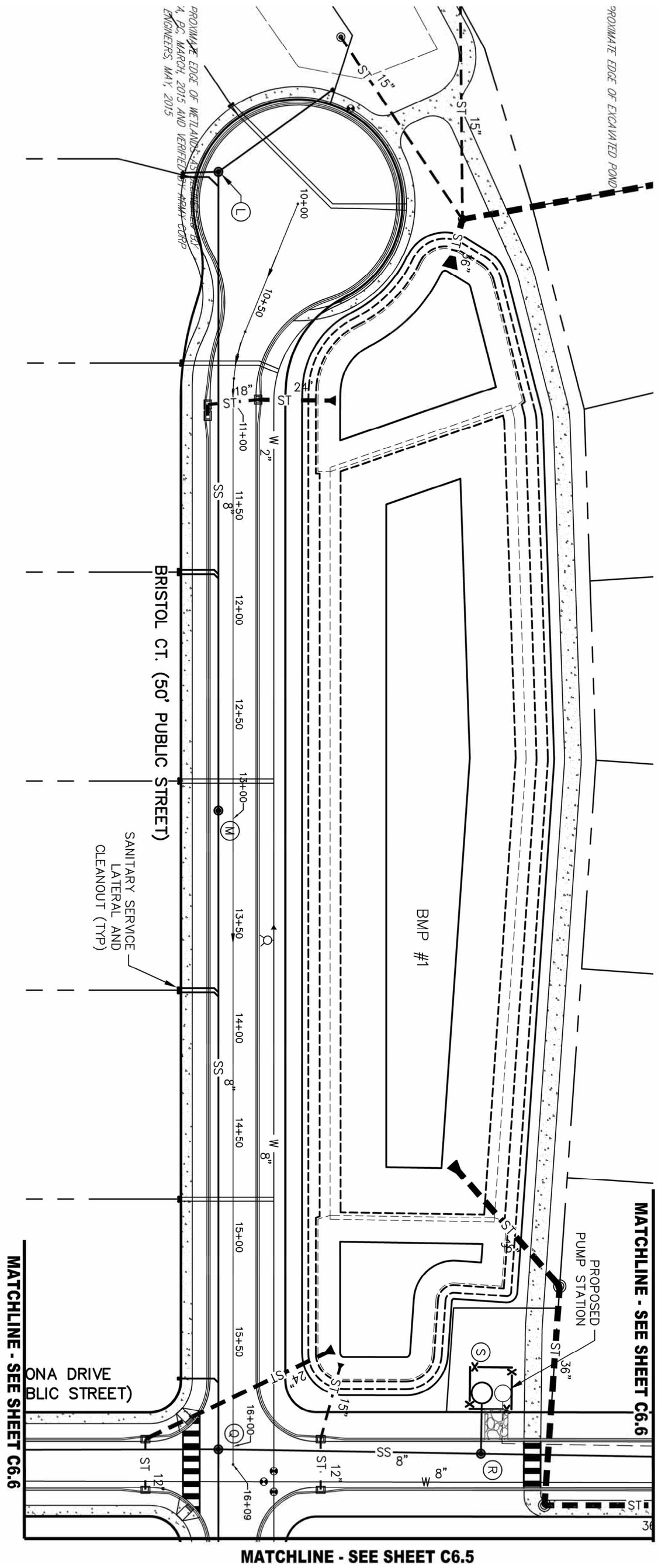

HORIZONTAL SCALE 1"=30'

VERTICAL SCALE 1"=3'

GRAPHIC SCALE 1" = 30'

ROADWAY PLAN AND PROFILE VIEW
of
COUNTRYSIDE ESTATES SINGLE-FAMILY SUBDIVISION
GPIN 8022-39-7183
(MB 21, PG 85, CHES., VA)
MOYOCK TOWNSHIP CURRITUCK COUNTY, NC

SHEET C6.4 25 of 43 Sheets
SCALE: AS SHOWN
PROJ. NO.: 15021

REV. NO.	REV. BY	REVISION DESCRIPTION	REVISION DATE

THIS DOCUMENT IS THE SOLE PROPERTY OF MSA, P.C., VIRGINIA BEACH, VA. THE MODIFICATION OF ANY DETAIL OR DESIGN OR USE FOR ANY PURPOSE OTHER THAN THAT INTENDED BY MSA, P.C. MAY NOT BE MADE WITHOUT THE EXPRESS WRITTEN CONSENT OF MSA, P.C.

DESIGNED CJL
DRAWN CJL
CHECKED CSA
APPROVED CSA
DATE 09/22/16

NORTH CAROLINA PROFESSIONAL SEAL 031728 09/22/16 ENGINEER C. SCOTT ACEY

MSA, P.C.
Environmental Sciences • Planning • Surveying
Civil & Environmental Engineering • Landscape Architecture
5033 Rouse Drive, Virginia Beach, VA 23462
757-490-9264 (Ofc) 757-490-0634 (Fax)
www.msaonline.com

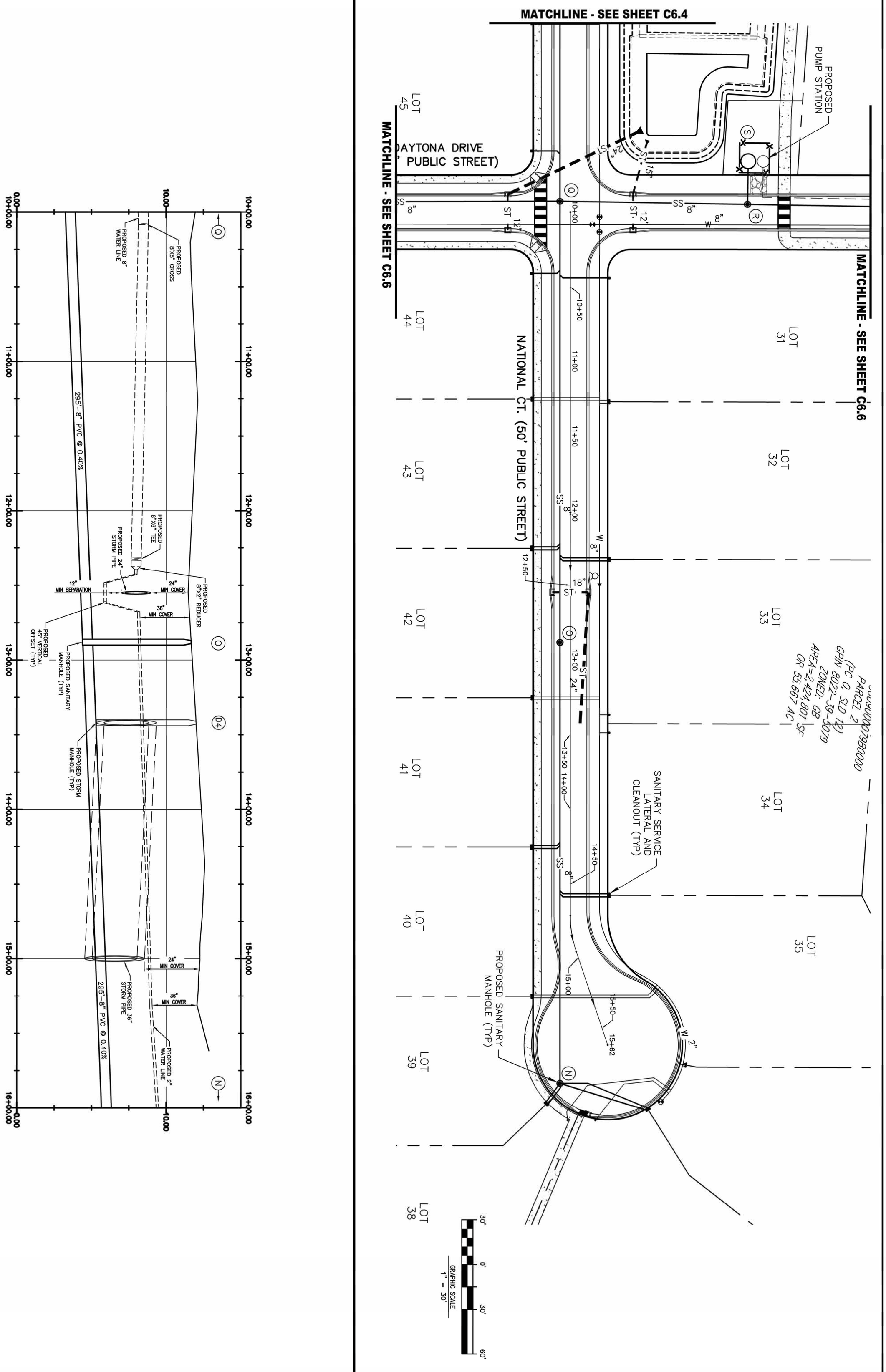

SHEET C6.5
26 of 43 Sheets

SCALE: AS SHOWN

PROJ. NO.: 15021

ROADWAY PLAN AND PROFILE VIEW
of
COUNTRYSIDE ESTATES SINGLE-FAMILY SUBDIVISION
GPIN 8022-39-7183
(MB 21, PG 85, CHES., VA)
MOYOCK TOWNSHIP — CURRITUCK COUNTY, NC

REV. NO.	REV. BY	REVISION DESCRIPTION	REVISION DATE

THIS DOCUMENT IS THE SOLE PROPERTY OF MSA, P.C., VIRGINIA BEACH, VA. THE MODIFICATION OF ANY DETAIL OR DESIGN OR USE FOR ANY PURPOSE OTHER THAN THAT INTENDED BY MSA, P.C. MAY NOT BE MADE WITHOUT THE EXPRESS WRITTEN CONSENT OF MSA, P.C.

DESIGNED	CJL
DRAWN	CJL
CHECKED	CSA
APPROVED	CSA
DATE	09/22/16

NORTH CAROLINA PROFESSIONAL ENGINEER SEAL 031728 09/22/16 C. SCOTT ACEY

MSA, P.C.
Environmental Sciences • Planning • Surveying
Civil & Environmental Engineering • Landscape Architecture
5033 Rouse Drive, Virginia Beach, VA 23462
757-490-9264 (Ofc) 757-490-0634 (Fax)
www.msaonline.com

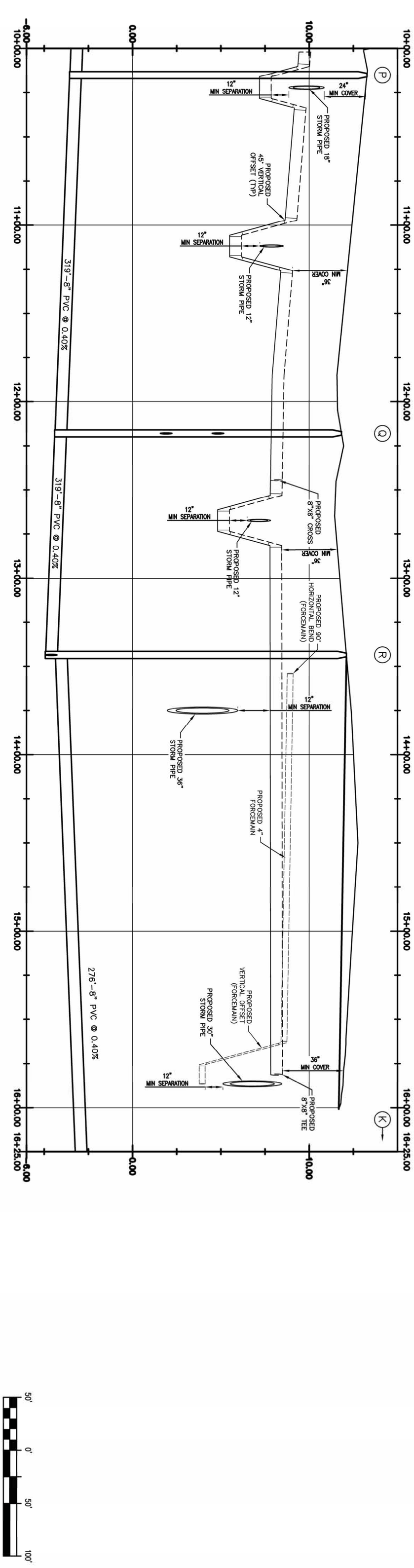

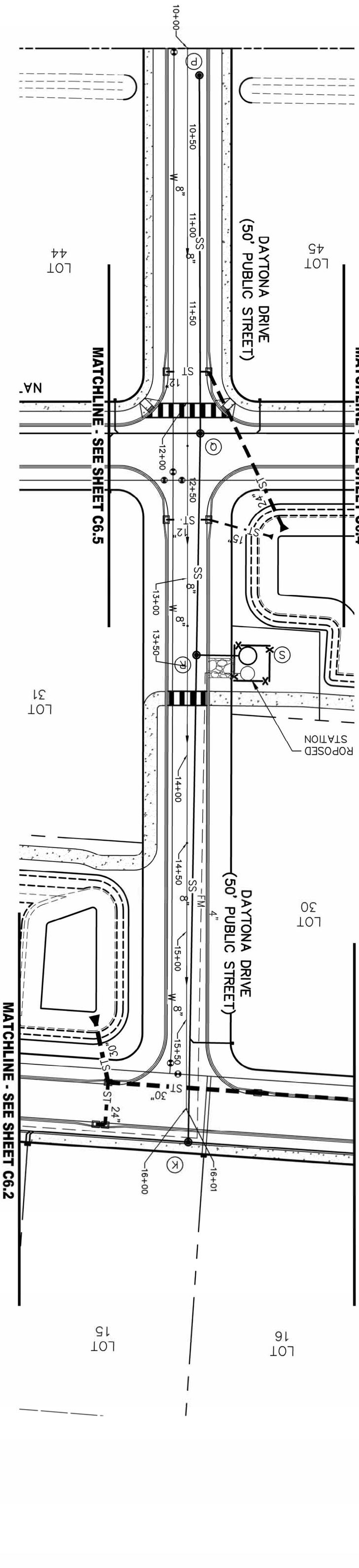

ROADWAY PLAN AND PROFILE VIEW
of
COUNTRYSIDE ESTATES SINGLE-FAMILY SUBDIVISION
GPIN 8022-39-7183
(MB 21, PG 85, CHES., VA)
MOYOCK TOWNSHIP — CURRITUCK COUNTY, NC

REV. NO.	REV. BY	REVISION DESCRIPTION	REVISION DATE

THIS DOCUMENT IS THE SOLE PROPERTY OF MSA, P.C., VIRGINIA BEACH, VA. THE MODIFICATION OF ANY DETAIL OR DESIGN OR USE FOR ANY PURPOSE OTHER THAN THAT INTENDED BY MSA, P.C. MAY NOT BE MADE WITHOUT THE EXPRESS WRITTEN CONSENT OF MSA, P.C.

DESIGNED	CJL
DRAWN	CJL
CHECKED	CSA
APPROVED	CSA
DATE	09/22/16

NORTH CAROLINA PROFESSIONAL SEAL 031728 ENGINEER C. SCOTT ACEY 09/22/16

MSA, P.C.
Environmental Sciences • Planning • Surveying
Civil & Environmental Engineering • Landscape Architecture
5033 Rouse Drive, Virginia Beach, VA 23462
757-490-9264 (Ofc) 757-490-0634 (Fax)
www.msaonline.com

PROJ. NO.: 15021
SCALE: AS SHOWN
SHEET C6.6
27 of 43 Sheets

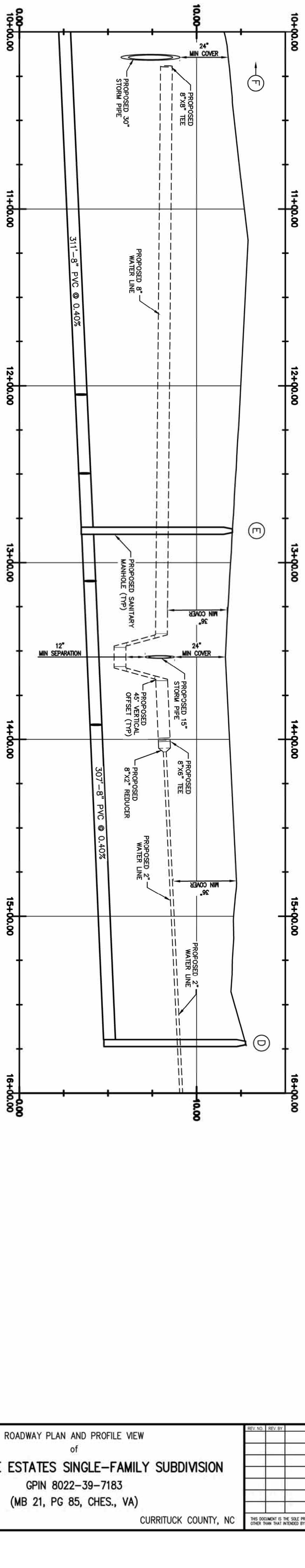

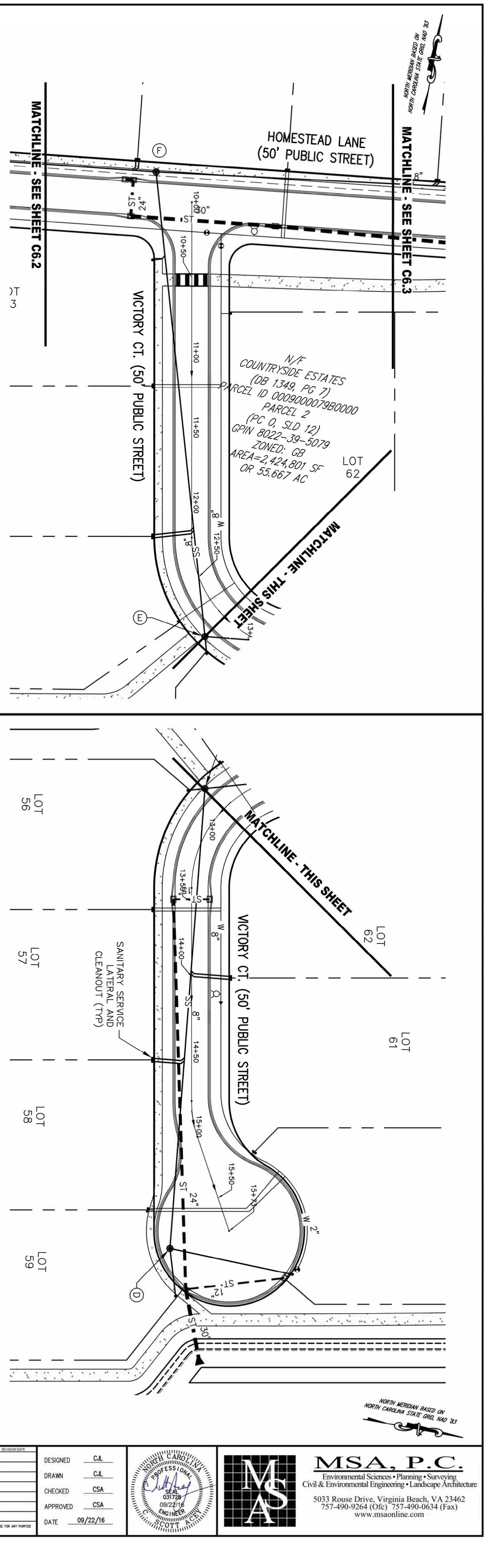

ROADWAY PLAN AND PROFILE VIEW
of
COUNTRYSIDE ESTATES SINGLE-FAMILY SUBDIVISION
GPIN 8022-39-7183
(MB 21, PG 85, CHES., VA)
MOYOCK TOWNSHIP — CURRITUCK COUNTY, NC

SHEET C6.7
28 of 43 Sheets
SCALE: AS SHOWN
PROJ. NO.: 15021

REV. NO.	REV. BY	REVISION DESCRIPTION	REVISION DATE

THIS DOCUMENT IS THE SOLE PROPERTY OF MSA, P.C., VIRGINIA BEACH, VA. THE MODIFICATION OF ANY DETAIL OR DESIGN OR USE FOR ANY PURPOSE OTHER THAN THAT INTENDED BY MSA, P.C. MAY NOT BE MADE WITHOUT THE EXPRESS WRITTEN CONSENT OF MSA, P.C.

DESIGNED CJL
DRAWN CJL
CHECKED CSA
APPROVED CSA
DATE 09/22/16

NORTH CAROLINA PROFESSIONAL SEAL 031728 09/22/16 ENGINEER C. SCOTT ACEY

MSA, P.C.
Environmental Sciences • Planning • Surveying
Civil & Environmental Engineering • Landscape Architecture
5033 Rouse Drive, Virginia Beach, VA 23462
757-490-9264 (Ofc) 757-490-0634 (Fax)
www.msaonline.com

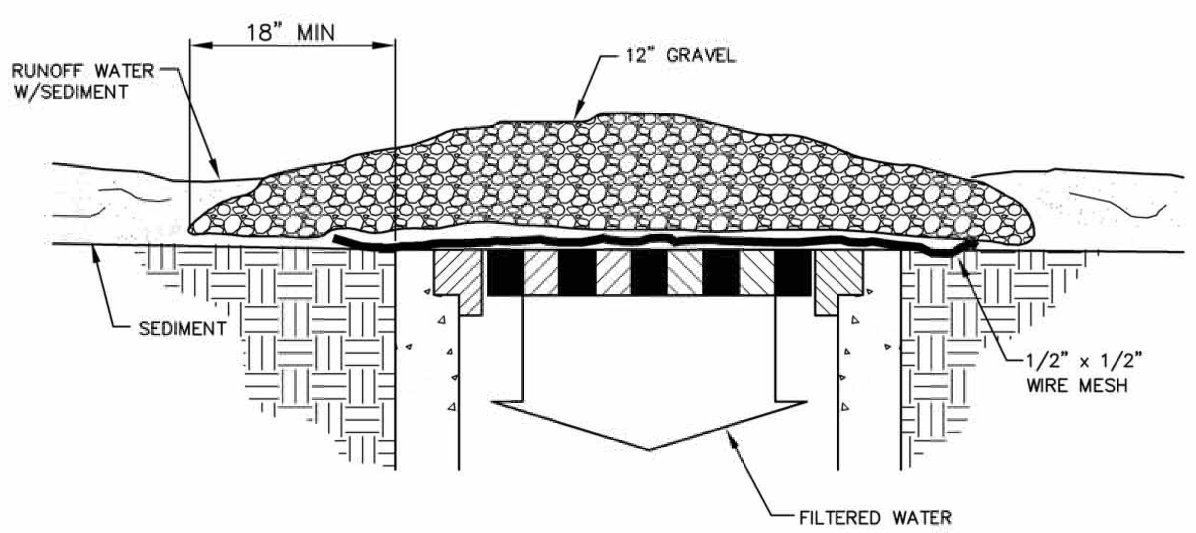

INLET PROTECTION (IP)
NOT TO SCALE

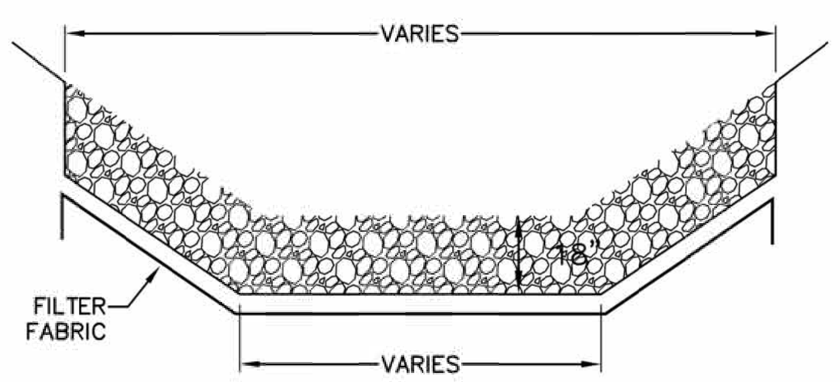

RIPRAP CHANNEL LINING

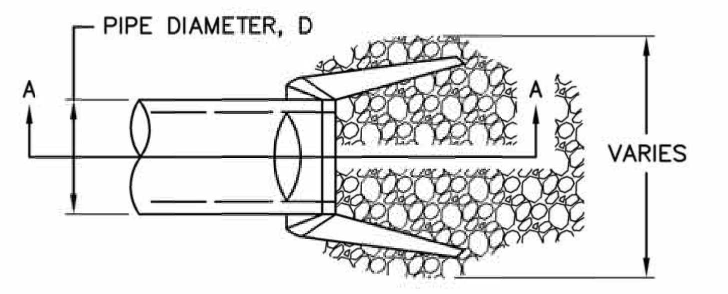

PLAN VIEW

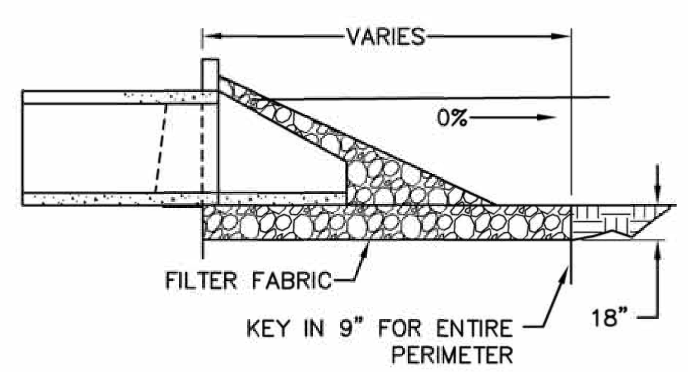

CULVERT OUTLET PROTECTION (OP)
NOT TO SCALE

PROJECT DESCRIPTION

THE SUBJECT PROPERTY IS LOCATED AT 166 CARATOKE HIGHWAY (NORTH CAROLINA STATE ROUTE 168) IN MOYOCK TOWNSHIP, CURRITUCK COUNTY, NORTH CAROLINA. THE PROJECT SITE CONSISTS OF APPROXIMATELY 55.7–ACRES OF VACANT LAND WHICH INCLUDES APPROXIMATELY 8.5–ACRES OF WETLANDS. THE PROPOSED PROJECT CONSISTS OF AN APPROXIMATELY 48–ACRE SINGLE–FAMILY SUBDIVISION, WITH 62 SINGLE–FAMILY HOME LOTS, A MINIMUM LOT SIZE OF 20,000 SQUARE FEET; AND ASSOCIATED INFRASTRUCTURE, INCLUDING ROADWAY IMPROVEMENTS, SANITARY SEWER COLLECTION UTILITIES, WATER DISTRIBUTION UTILITIES, STORM SEWER COLLECTION SYSTEMS, AND STORMWATER MANAGEMENT BEST MANAGEMENT PRACTICES (BMPS).

THE PROJECT WILL BE CONSTRUCTED IN TWO PHASES, AS SHOWN ON SHEET C1.3, PHASING PLAN, OF THE CONSTRUCTION PLANS. AS SHOWN, PHASE 1 WILL CONSIST OF THE PROPOSED INFRASTRUCTURE FOR THE DEVELOPMENT AND PHASE 2 WILL CONSIST OF ROUGH GRADING THE REMAINING SINGLE–FAMILY HOME LOTS.

SITE DESCRIPTION

THE SUBJECT PROPERTY WAS PREVIOUSLY DEVELOPED WITH A RACETRACK AND ASSOCIATED BUILDINGS AND USED FOR DOG RACING UNTIL THE 1950S. NASCAR OCCUPIED THE SUBJECT PROPERTY IN THE 1960S. THE RACETRACK AND BUILDINGS WERE DEMOLISHED PRIOR TO 1976 AND THE SUBJECT PROPERTY HAS BEEN VACANT SINCE. THE SITE IS CURRENTLY OVERGROWN WITH THICK VEGETATION. THE EASTERN END OF THE SITE HAS MULTIPLE PAVED ENTRANCES FROM CARATOKE HIGHWAY. SEVERAL OVERGROWN AREAS NEAR THE EASTERN BORDER OF THE SUBJECT PROPERTY HAD LIMITED AMOUNTS OF DEBRIS PRESENT. A LARGE CONCRETE SLAB HAD BEEN PLACED WEST OF THE MAIN PAVED ENTRANCE. THIS SLAB COVERED MOST OF THE WIDTH OF THE PROPERTY FROM NORTH TO SOUTH. THE WESTERN END OF THE SITE IS COVERED BY AN APPROXIMATELY 7.7–ACRE CONTIGUOUS WETLAND AREA.

CONSTRUCTION SEQUENCE:

1. OBTAIN PLAN APPROVAL AND OTHER APPLICABLE PERMITS.
2. FLAG THE WORK LIMITS AND MARK BUFFER AREAS FOR PROTECTION.
3. INSTALL CONSTRUCTION ENTRANCE.
4. REGRADE EXISTING DITCHES ALONG THE PROJECT'S SOUTH PROPERTY LINE AND BETWEEN THE PROJECT'S SOUTH PROPERTY LINE AND RTE. 168, WHICH WILL SERVE AS THE ULTIMATE OUTFALL FOR THE PROPOSED STORMWATER SYSTEM; INSTALL TEMPORARY SEDIMENT BASINS AND ASSOCIATED OUTFALL STORM PIPING SYSTEMS WITH INLET AND OUTLET PROTECTION.
5. CONSTRUCT TEMPORARY DIVERSIONS TO DIRECT DRAINAGE TO TEMPORARY SKIMMER SEDIMENT BASINS.
6. COMPLETE PHASE 1 SITE CLEARING AND DEMOLITION. LIMIT CLEARING AND GRUBBING AS NECESSARY TO INSTALL REQUIRED DEVICES.
7. INSTALL UNDERGROUND UTILITIES AND PUMP STATION, ROUGH GRADE PHASE 1 SITE AREA, STOCKPILE TOPSOIL, INSTALL CULVERTS, INLET, AND OUTLET PROTECTION, AND INSTALL SEDIMENT FENCE AS NEEDED. MAINTAIN DIVERSIONS AS NEEDED.
8. COMPLETE FINAL GRADING FOR ROADWAYS, PLACE AGGREGATE BASE AND INSTALL CONCRETE CURB AND GUTTER AND CONCRETE MEDIAN.
9. COMPLETE ROADWAY PAVING, FINAL GRADING OF DISTURBED AREAS, TOPSOIL, AND PERMANENTLY VEGETATE, LANDSCAPE, AND MULCH.
10. ALL EROSION AND SEDIMENT CONTROL PRACTICES WILL BE INSPECTED WEEKLY AND AFTER RAINFALL EVENTS. NEEDED REPAIRS WILL BE MADE IMMEDIATELY.
11. REMOVE ANY MATERIAL FROM TEMPORARY SEDIMENT BASINS AND RECONSTRUCT TO ORIGINAL BMP DESIGN.
12. AFTER SITE IS STABILIZED, REMOVE ALL TEMPORARY MEASURES AND INSTALL PERMANENT VEGETATION ON THE DISTURBED AREAS.

GROUND STABILIZATION

SOIL STABILIZATION SHALL BE ACHIEVED ON ANY AREA OF A SITE WHERE LAND–DISTURBING ACTIVITIES HAVE TEMPORARILY OR PERMANENTLY CEASED ACCORDING TO THE FOLLOWING SCHEDULE:

- ALL PERIMETER DIKES, SWALES, DITCHES, PERIMETER SLOPES AND ALL SLOPES STEEPER THAN 3 HORIZONTAL TO 1 VERTICAL (3: 1) SHALL BE PROVIDED TEMPORARY OR PERMANENT STABILIZATION WITH GROUND COVER AS SOON AS PRACTICABLE BUT IN ANY EVENT WITHIN 7 CALENDAR DAYS FROM THE LAST LAND–DISTURBING ACTIVITY.
- ALL OTHER DISTURBED AREAS SHALL BE PROVIDED TEMPORARY OR PERMANENT STABILIZATION WITH GROUND COVER AS SOON AS PRACTICABLE BUT IN ANY EVENT WITHIN 14 CALENDAR DAYS FROM THE LAST LAND–DISTURBING ACTIVITY.

CONDITIONS IN MEETING THE STABILIZATION REQUIREMENTS ABOVE, THE FOLLOWING CONDITIONS OR EXEMPTIONS SHALL APPLY:

- EXTENSIONS OF TIME MAY BE APPROVED BY THE PERMITTING AUTHORITY BASED ON WEATHER OR OTHER SITE–SPECIFIC CONDITIONS THAT MAKE COMPLIANCE IMPRACTICABLE.
- ALL SLOPES 50–FEET IN LENGTH OR GREATER SHALL APPLY THE GROUND COVER WITHIN 7 DAYS EXCEPT WHEN THE SLOPE IS FLATTER THAN 4: 1. SLOPES LESS THAN 50–FEET SHALL APPLY GROUND COVER WITHIN 14 DAYS EXCEPT WHEN SLOPES ARE STEEPER THAN 3:1, THE 7–DAY REQUIREMENT APPLIES.
- ANY SLOPED AREA FLATTER THAN 4:1 SHALL BE EXEMPT FROM THE 7–DAY GROUND COVER REQUIREMENT.
- SLOPES 10' OR LESS IN LENGTH SHALL BE EXEMPT FROM THE 7–DAY GROUND COVER REQUIREMENT EXCEPT WHEN THE SLOPE IS STEEPER THAN 2: 1.
- ALTHOUGH STABILIZATION IS USUALLY SPECIFIED AS GROUND COVER, OTHER METHODS, SUCH AS CHEMICAL STABILIZATION, MAY BE ALLOWED ON A CASE–BY–CASE BASIS.
- FOR PORTIONS OF PROJECTS WITHIN THE SEDIMENT CONTROL COMMISSION–DEFINED "HIGH QUALITY WATER ZONE" (L5A NCAC 04A. 0105) , STABILIZATION WITH GROUND COVER SHALL BE ACHIEVED AS SOON AS PRACTICABLE BUT IN ANY EVENT ON ALL AREAS OF THE SITE WITHIN 7 CALENDAR DAYS FROM THE LAST LAND–DISTURBING ACT.
- PORTIONS OF A SITE THAT ARE LOWER IN ELEVATION THAN ADJACENT DISCHARGE LOCATIONS AND ARE NOT EXPECTED TO DISCHARGE DURING CONSTRUCTION MAY BE EXEMPT FROM THE TEMPORARY GROUND COVER REQUIREMENTS IF IDENTIFIED ON THE APPROVED E&SC PLAN OR ADDED BY THE PERMITTING AUTHORITY.

MAINTENANCE PLAN

1. ALL EROSION AND SEDIMENT CONTROL PRACTICES WILL BE CHECKED FOR STABILITY AND OPERATION FOLLOWING EVERY RUNOFF–PRODUCING RAINFALL BUT IN NO CASE LESS THAN ONCE EVERY WEEK. ANY NEEDED REPAIRS WILL BE MADE IMMEDIATELY TO MAINTAIN ALL PRACTICES AS DESIGNED.
2. THE SEDIMENT BASIN WILL BE CLEANED OUT WHEN THE LEVEL OF SEDIMENT REACHES 2.0–FEET BELOW THE TOP OF THE RISER.
3. SEDIMENT WILL BE REMOVED FROM BEHIND SEDIMENT FENCE WHEN IT BECOMES ABOUT 0.5–FEET DEEP AT THE FENCE. THE SEDIMENT FENCE WILL BE REPAIRED AS NECESSARY TO MAINTAIN A BARRIER.
4. ALL SEEDED AREAS WILL BE FERTILIZED, RESEEDED AS NECESSARY, AND MULCHED TO MAINTAIN A VIGOROUS, DENSE VEGETATIVE COVER.

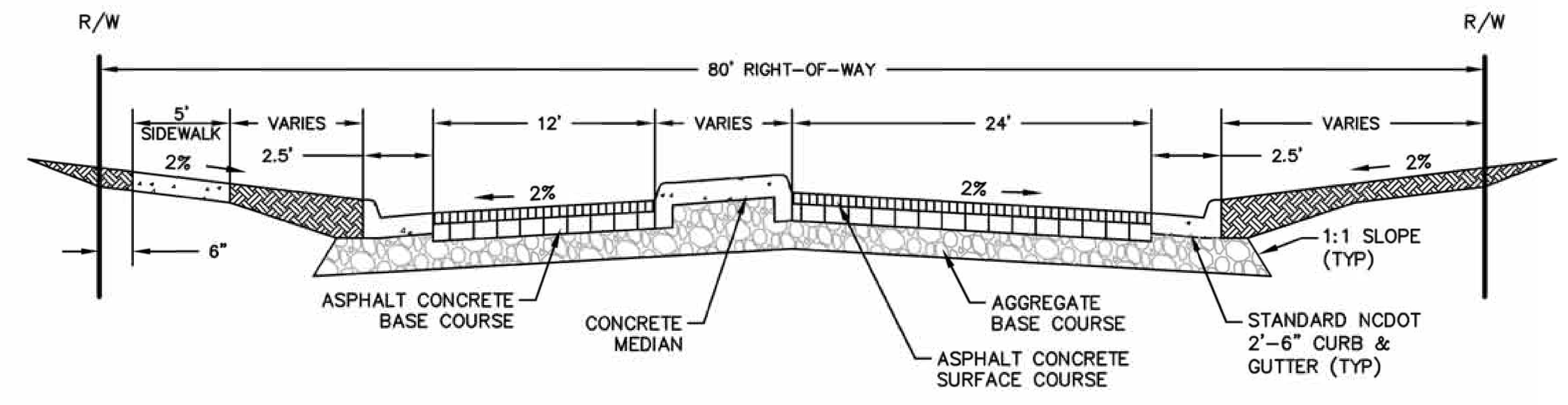

TYPICAL ENTRANCE ROADWAY SECTION I
NTS

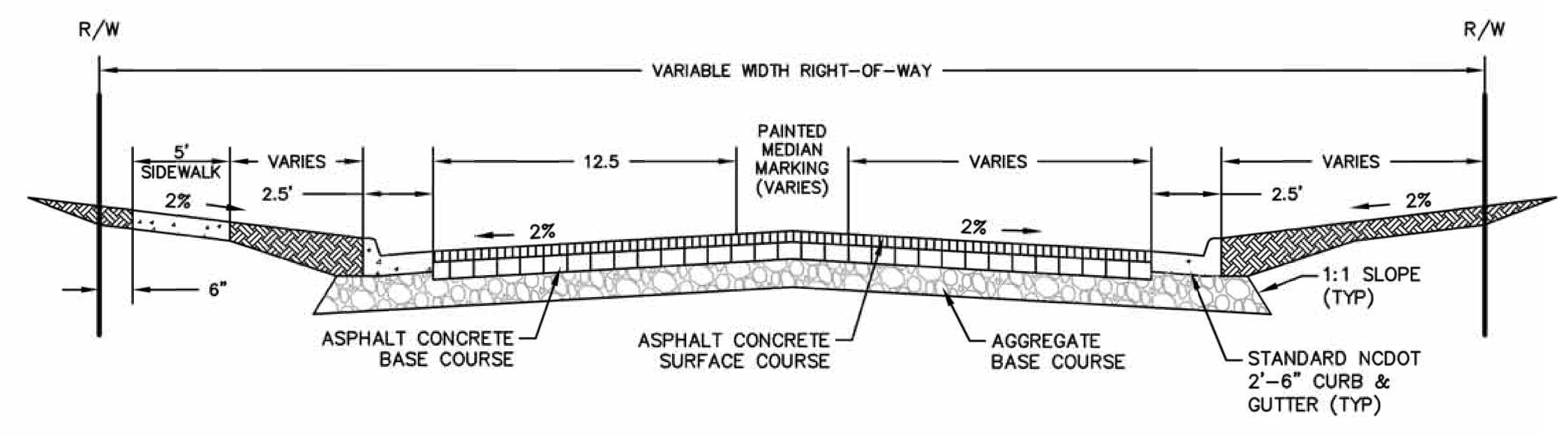

TYPICAL ENTRANCE ROADWAY SECTION II
NTS

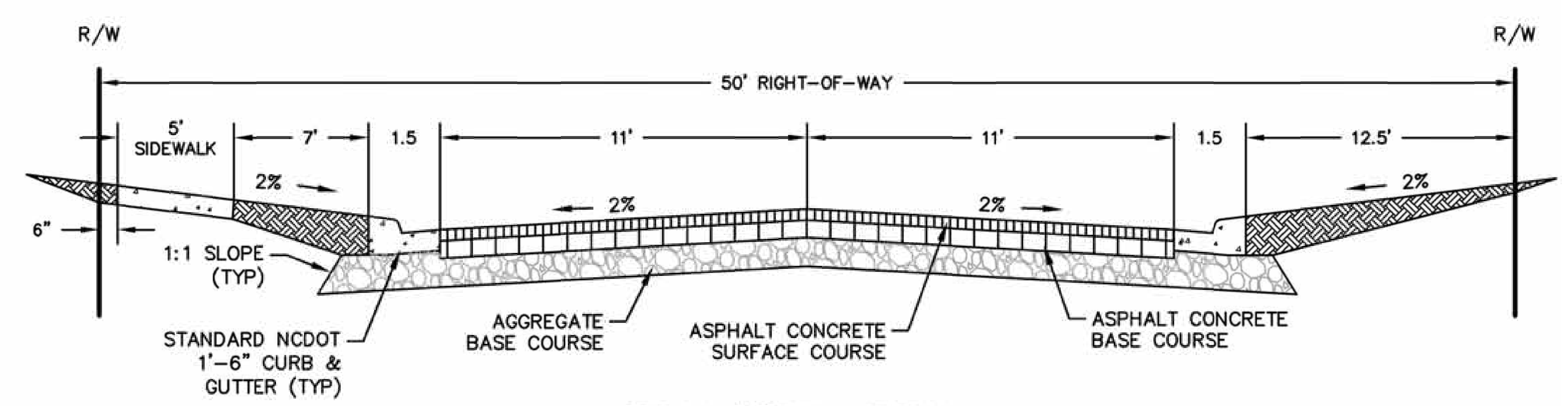

TYPICAL ROADWAY SECTION III
NTS

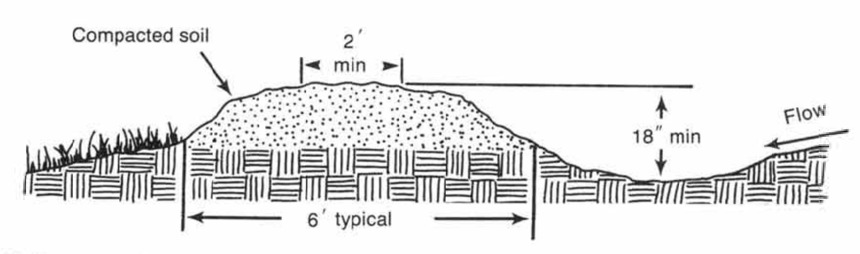

Figure 6.20a Temporary earthen diversion dike.

TEMPORARY DIVERSION DIKE DETAIL
NCDEQ E&SC ST'D. & SPEC. 6.20

ACCEPTABLE TEMPORARY SEEDING PLANT MATERIALS

PLANTING DATES	SPECIES	RATE (LBS/AC)
AUG 15 – APR 15	RYE GRAIN	30
AUG 15 – APR 15	WHEAT	30
APR 15 – AUG 15	GERMAN MILLET	10
APR 15 – AUG 15	BROWNTOP MILLET	10

TEMPORARY SEEDING SCHEDULE
NCDEQ E&SC ST'D. & SPEC. 6.11

PERMANENT SEEDING SPECIFICATIONS FOR COASTAL PLAIN AREA

LAND USE	SEED[1] SPECIES	APPLICATION RATES
Minimum Care Lawn (Commercial or Residential)	Tall Fescue[1] Or Bermudagrass[1]	175–200 lbs. 75 lbs.
High–Maintenance Lawn	Tall Fescue[1] Or Bermudagrass[1] (seed) Or Bermudagrass[1] (by other vegetative establishment method, see Std. & Spec. 6.11)	200–250 lbs. 40 lbs. (unhulled) 30 lbs. (hulled)
General Slope (3:1 or less)	Tall Fescue[1] Red Top Grass or Creeping Red Fescue Seasonal Nurse Crop[2]	128 lbs. 2 lbs. 20 lbs. TOTAL: 150 lbs.

1 – When selecting varieties of turfgrass, use the NCDEQ Erosion & Sediment Control Standard and Specification 6.11.

2 – Use seasonal nurse crop in accordance with seeding dates as stated below:
February, March–April....German Rye
May 1st–August....Kobe Lespedeza
September, October–November 15th....Annual Rye
November 16th–January....Winter Rye

FERTILIZER & LIME

Apply 10–20–20 fertilizer at a rate of 1,050 lbs. / acre (or 24 lbs. / 1,000 sq. ft.)
Apply Ground Limestone at a rate of 3,300 lbs/acre (or 75 lbs. / 1,000 sq. ft.)

NOTE:
- A soil test is necessary to determine the actual amount of lime required to adjust the soil pH of site.
- Incorporate the lime and fertilizer into the top 4–6 inches of the soil by disking or by other means.

SEEDING SCHEDULE
NCDEQ E&SC ST'D. & SPEC. 6.11

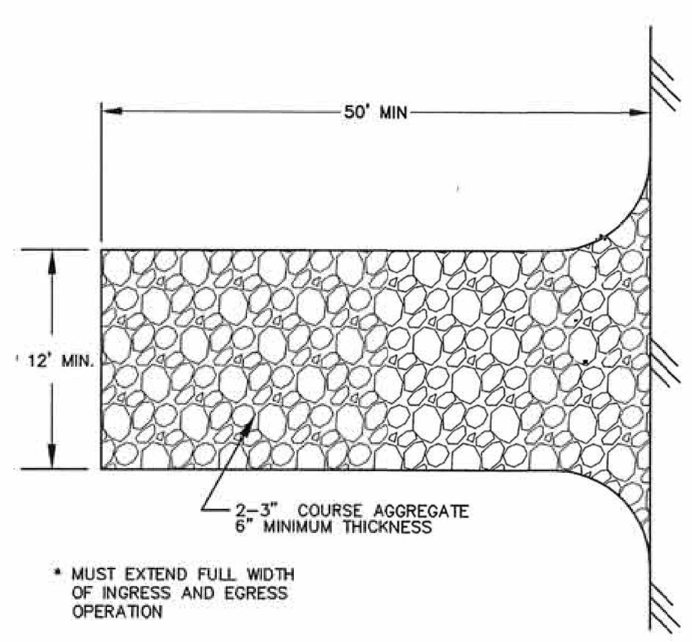

CONSTRUCTION ENTRANCE PAD (CE)
NTS

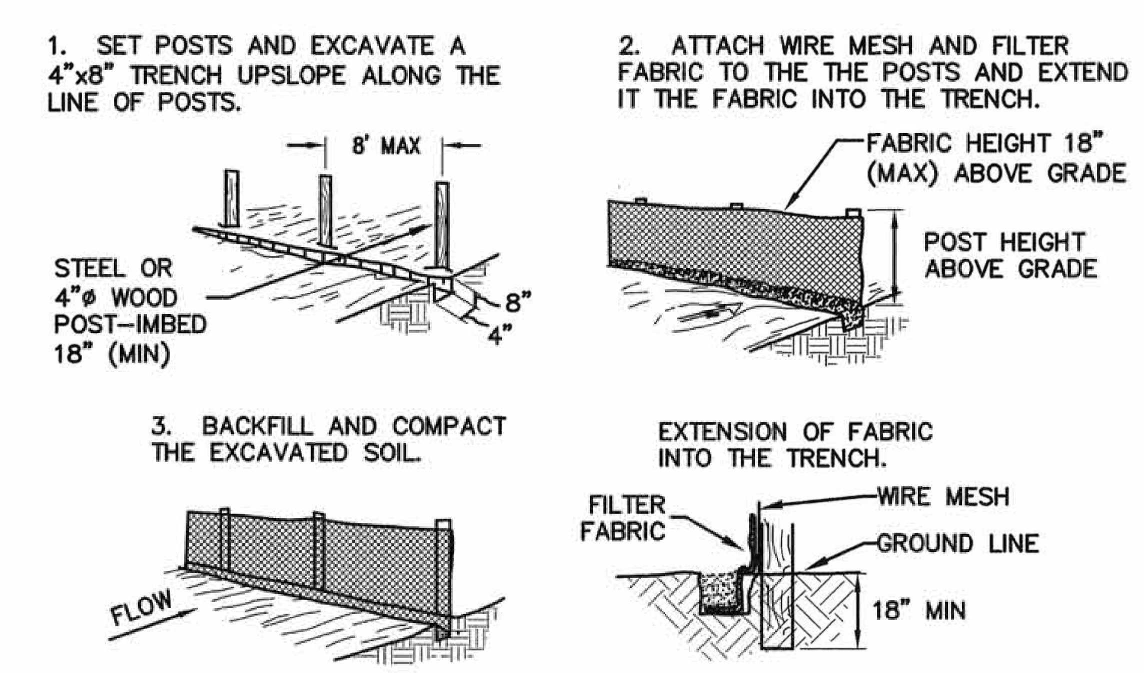

NOTES:

1. PROVIDE A PERVIOUS SHEET OF POLYPROPYLENE, POLYESTER, OR POLYETHYLENE YARN WITH THE FOLLOWING PROPERTIES
   - FILTER EFFICIENCY 85%(MIN)
   - TENSILE STRENGTH AT 20%(MAX) ELONGATION 30lb/IN (MIN)
   - SLURRY FLOW RATE 0.3 GAL/SF/MIN (MIN)
2. PROVIDE FABRIC WHICH CONTAINS ULTRAVIOLET RAY INHIBITORS AND STABILIZERS TO PROVIDE A MINIMUM OF 6 MONTHS OF EXPECTED USABLE CONSTRUCTION LIFE AT A TEMPERATURE RANGE OF –0° TO 120°F.
3. CONSTRUCT FENCE FROM A CONTINUOUS ROLL OF FILTER FABRIC TO AVOID JOINTS. WHEN JOINTS ARE NECESSARY OVERLAP FABRIC TO THE NEXT POST.
4. PROVIDE WIRE MESH REINFORCEMENT A MIN 14 GAUGE WITH A MAX MESH SPACING OF 6".
5. DO NOT ATTACH FILTER FABRIC TO EXISTING TREES.

(SF) SILT FENCE
NTS

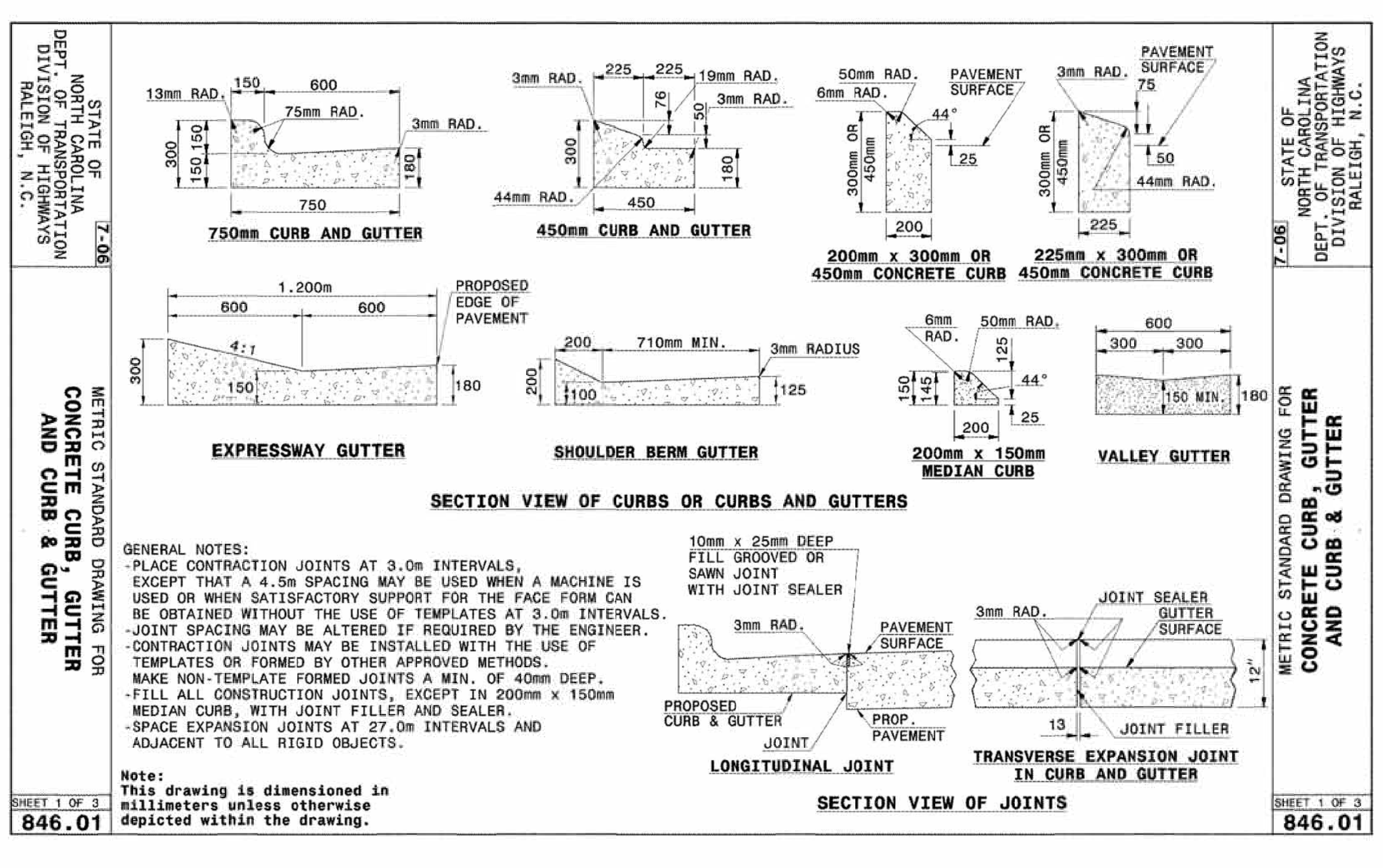

MSA, P.C.
Environmental Sciences • Planning • Surveying
Civil & Environmental Engineering • Landscape Architecture
5033 Rouse Drive, Virginia Beach, VA 23462
757-490-9264 (Ofc) 757-490-0634 (Fax)
www.msaonline.com

NORTH CAROLINA PROFESSIONAL ENGINEER SEAL 031728 C. SCOTT ACEY 09/22/16

DESIGNED CJL | DRAWN CJL | CHECKED CSA | APPROVED CSA | DATE 09/22/16

REV. NO. | REV. BY | REVISION | DESCRIPTION | REVISION DATE

THIS DOCUMENT IS THE SOLE PROPERTY OF MSA, P.C., VIRGINIA BEACH, VA. THE MODIFICATION OF ANY DETAIL OR DESIGN OR USE FOR ANY PURPOSE OTHER THAN THAT INTENDED BY MSA, P.C. MAY NOT BE MADE WITHOUT THE EXPRESS WRITTEN CONSENT OF MSA, P.C.

NOTES AND DETAILS
of
COUNTRYSIDE ESTATES SINGLE–FAMILY SUBDIVISION
GPIN 8022–39–7183
(MB 21, PG 85, CHES., VA)
MOYOCK TOWNSHIP — CURRITUCK COUNTY, NC

SHEET C7.1

SCALE: AS SHOWN
PROJ. NO.: 15021

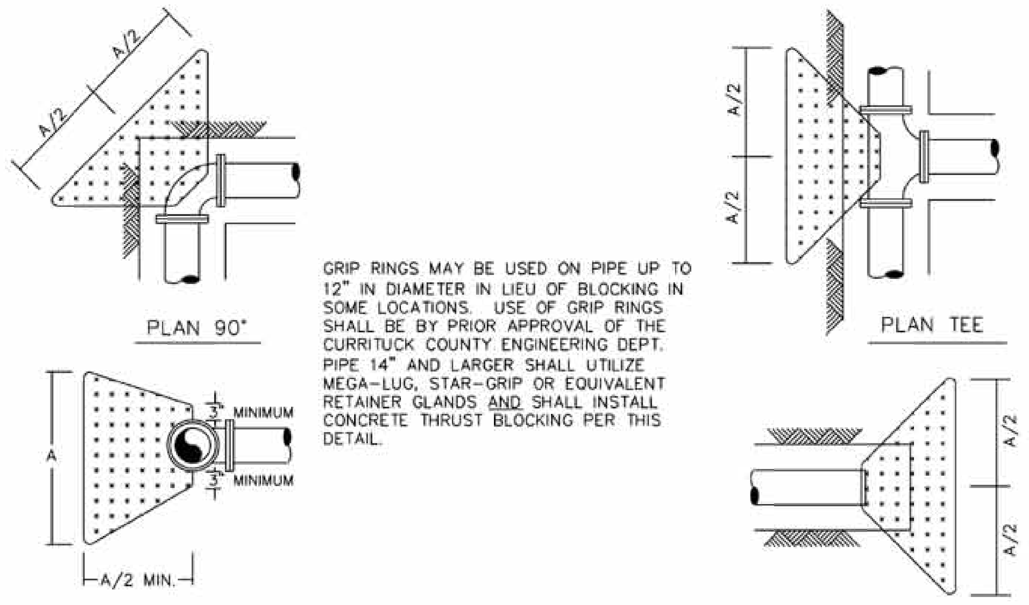

GRIP RINGS MAY BE USED ON PIPE UP TO 12" IN DIAMETER IN LIEU OF BLOCKING IN SOME LOCATIONS. USE OF GRIP RINGS SHALL BE BY PRIOR APPROVAL OF THE CURRITUCK COUNTY ENGINEERING DEPT. PIPE 14" AND LARGER SHALL UTILIZE MEGA-LUG, STAR-GRIP OR EQUIVALENT RETAINER GLANDS AND SHALL INSTALL CONCRETE THRUST BLOCKING PER THIS DETAIL.

CONCRETE THRUST BLOCK SCHEDULE

FITTING	PIPE SIZE (NOM. DIA. IN INCHES)								
	2"	4"	6"	8"	10"	12"	16"	18"	20"	24"
TEE	1.6	1.9	2.8	3.8	4.7	5.9	7.5	8.5	9.4	11.3
90° BEND	1.5	1.9	2.8	3.8	4.7	5.9	7.5	8.5	9.4	11.3
45° BEND	1.0	1.4	2.1	2.8	3.5	4.3	5.5	6.2	6.9	7.7
22 1/2° BEND	.8	1.0	1.5	2.0	2.5	3.1	4.0	4.5	4.9	5.5

TABLE "A" DIMENSIONS (IN FEET)

THRUST BLOCK DETAIL
NTS

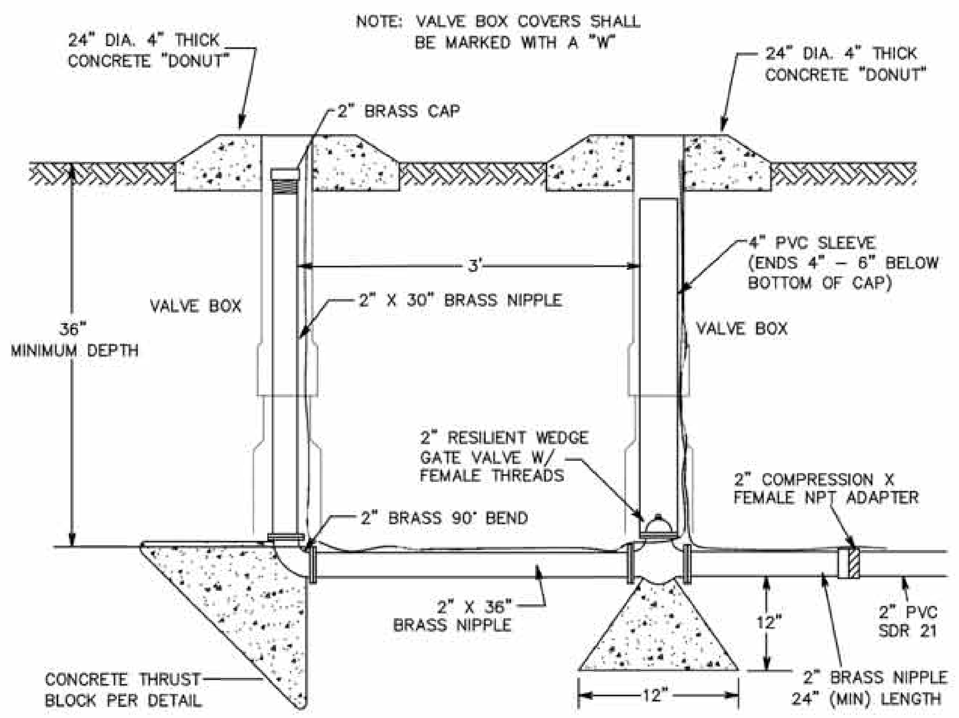

2" BLOW-OFF DETAIL
NTS

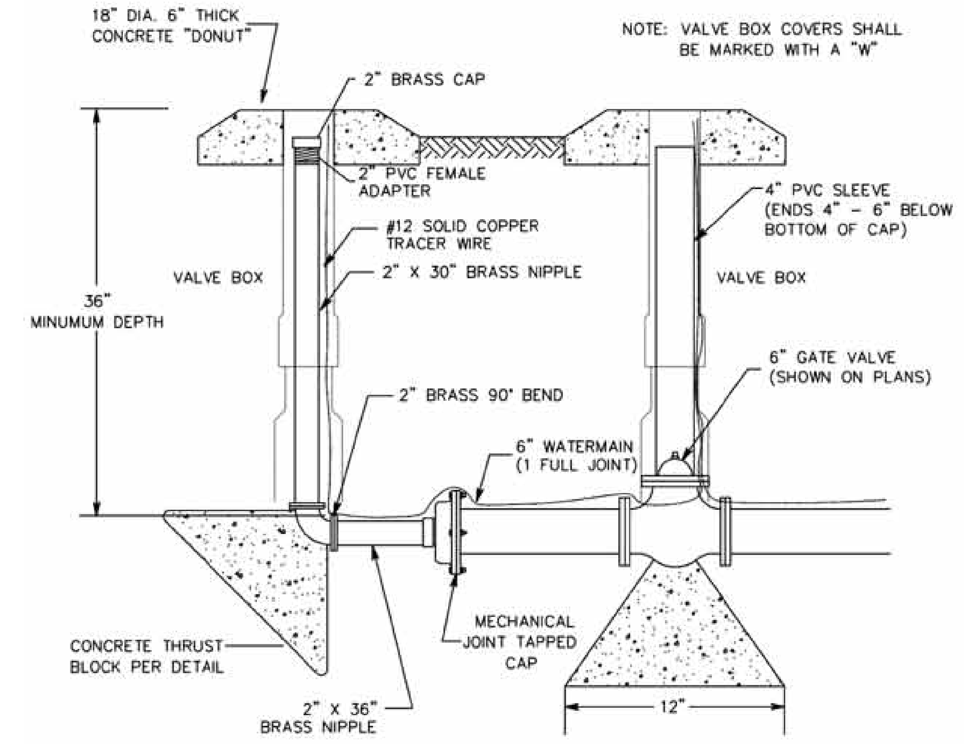

TEMPORARY BLOW-OFF DETAIL
NTS

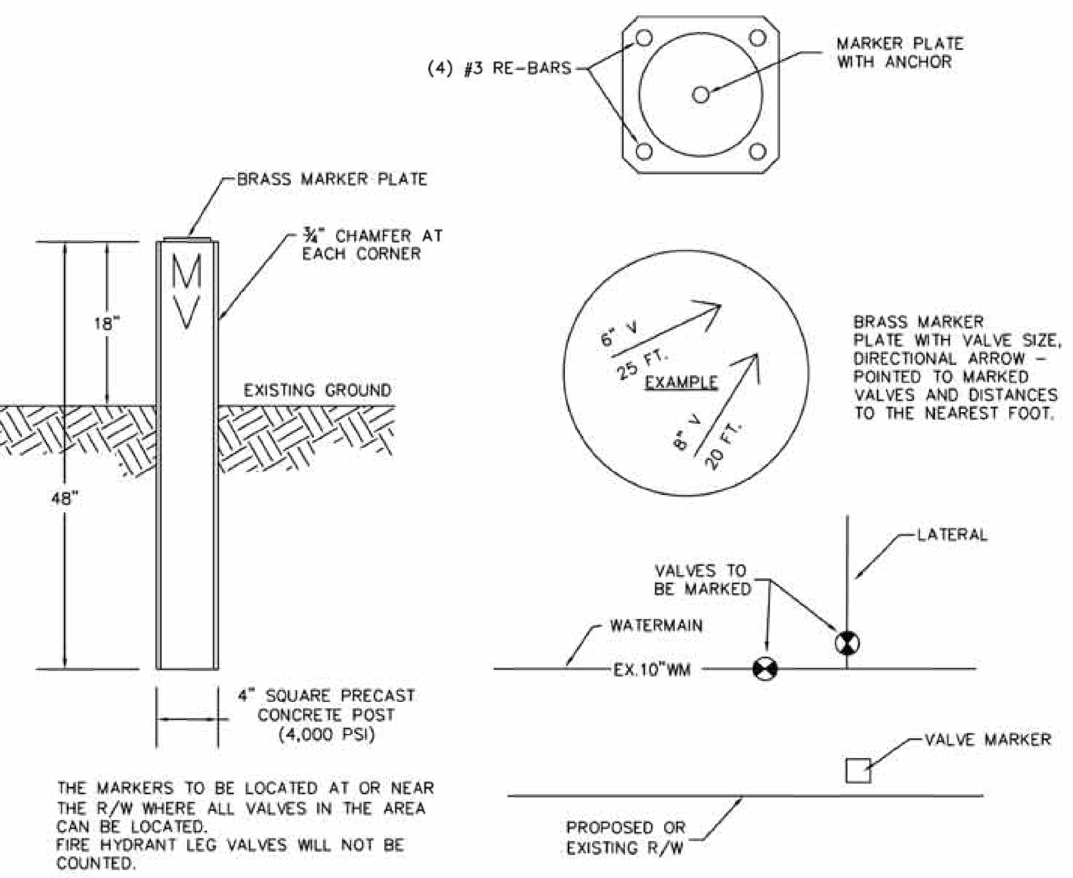

VALVE MARKER DETAIL
NTS

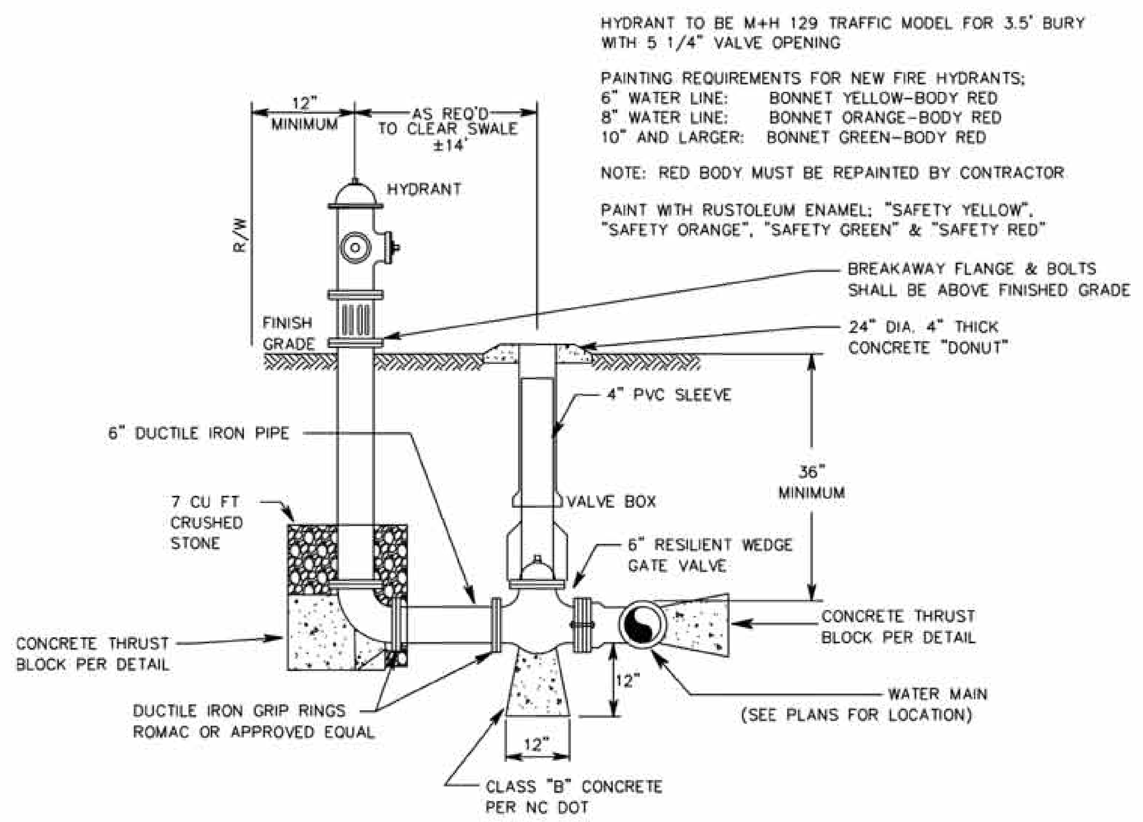

NOTES:
1. DO NOT BLOCK HYDRANT DRAIN WITH THRUST BLOCKING
2. COAT TIE RODS & NUTS WITH EPOXY
3. DO NOT SUPPORT VALVE BOX DIRECTLY ON VALVE
4. ALL JOINTS SHALL BE MECHANICAL JOINTS
5. INSTALL REFLECTIVE HYDRANT MARKER, STIMPSONITE, MODEL 88AB, TWO-WAY BLUE REFLECTOR IN CENTERLINE OF PAVEMENT PERPENDICULAR TO HYDRANT LOCATION USING E-BOND EPOXY ADHESIVE 1240/1241 PER MANUFACTURERS SPECIFICATIONS.

FIRE HYDRANT DETAIL
NTS

NOTES:

1. TAP SHALL BE PERFORMED IN THE PRESENCE OF A REPRESENTATIVE OF CURRITUCK CO. WATER DEPT. AND THE ENGINEER.

2. TAPPING SLEEVE AIR TEST SHALL BE PERFORMED AT 100 PSI FOR 15 MINUTES.

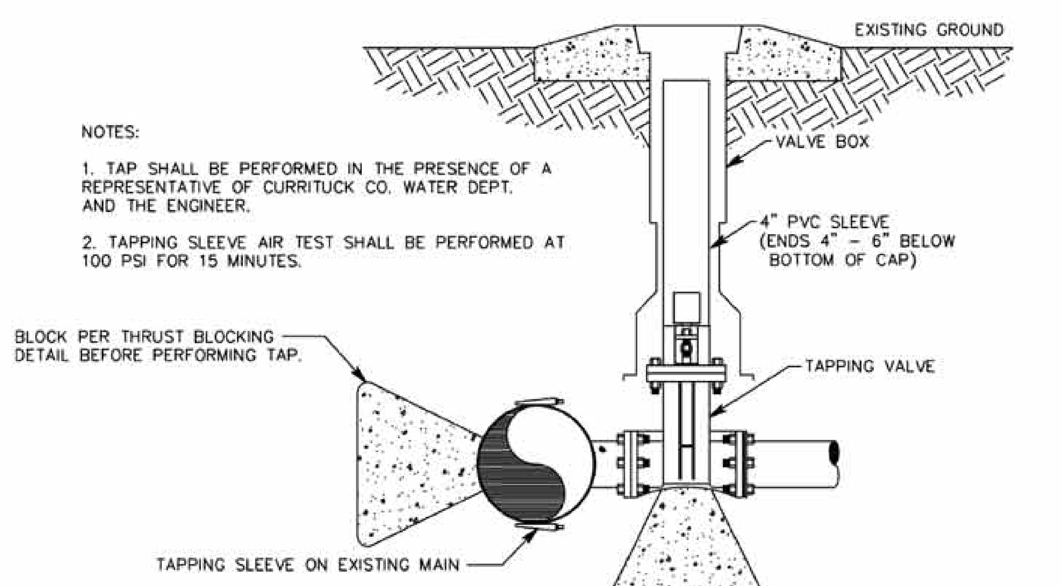

TAPPING DETAIL
NTS

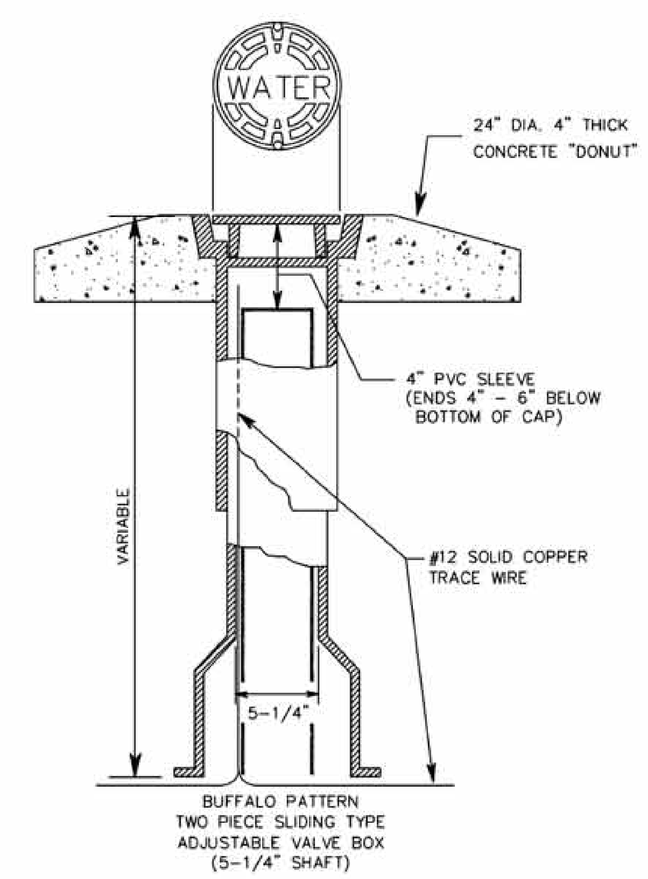

VALVE BOX
NTS

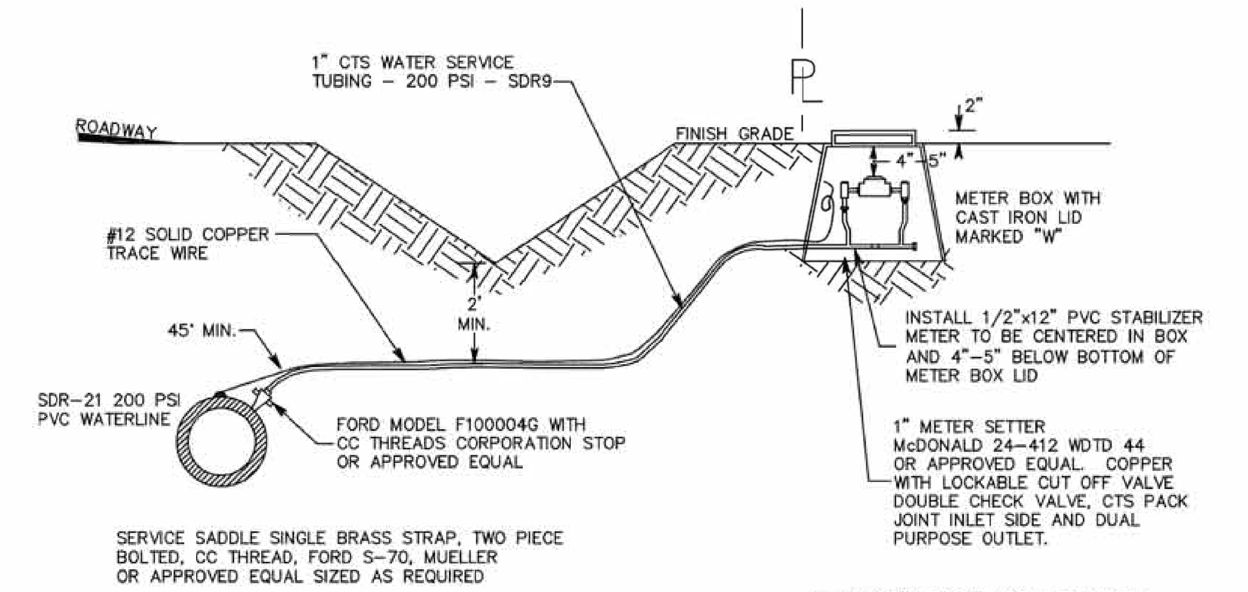

CONTRACTOR TO FURNISH AND INSTALL PLASTIC METER BOX WITH CAST IRON LID AND ANGLE STOP (BY FORD OR McDONALD) TO MEET CURRITUCK COUNTY STANDARDS

CONTRACTOR SHALL PURCHASE METER AND PROVIDE TO CURRITUCK COUNTY WATER DEPARTMENT FOR INSTALLATION (NEPTUNE T10 SERIES OR HERSY 400 SERIES 1" METER)

1" WATER SERVICE LATERAL DETAIL
NTS

WATER UTILITY DISTRIBUTION

WATER DISTRIBUTION SYSTEM SHALL BE CONSTRUCTED IN ACCORDANCE WITH THE LATEST CURRITUCK COUNTY SPECIFICATIONS AND STANDARDS.

2.1 WATER PIPING

B. POLYVINYL CHLORIDE (PVC): AWWA C900 DR 18 CLASS 150 (PIPE 4" – 12") AND AWWA C905, DR 18 CLASS 150 (PIPE LARGER THAN 12").

1. FITTINGS FOR PVC PIPE SIZES" AND LARGER SHALL BE CAST FROM DUCTILE IRON IN ACCORDANCE WITH ANSI/AWWA C153/A21.53.
2. DUCTILE IRON FITTINGS SHALL HAVE A WORKING PRESSURE RATING OF 350 PSI FOR FITTING SIZES 12" AND LESS. FITTING OVER 12" SHALL HAVE A MINIMUM RATED WORKING PRESSURE OF 250 PSI. MECHANICAL JOINTS SHALL CONFORM TO ANSI/AWWA A21.11/C111. WALL AND SOCKET THICKNESSES SHALL BE EQUAL TO CLASS 54 DUCTILE IRON PIPE AS SPECIFIED IN ANSI/AWWA A21.51/C151. DUCTILE IRON SHALL BE IN ACCORDANCE WITH ASTM A563 WITH MINIMUM PHYSICAL QUALITIES OF 70,000 PSI TENSILE STRENGTH, 50,000 PSI YIELD STRENGTH, AND 5% ELONGATION.
3. ALL DUCTILE CAST IRON FITTINGS SHALL HAVE CEMENT MORTAR LINING CONFORMING TO ANSI STANDARD A21.4, LATEST EDITION. BURIED FITTINGS SHALL BE GIVEN A FULL COAT INSIDE AND OUTSIDE OF A BITUMINOUS COATING WHICH CONFORMS TO ANSI 21.4, LATEST REVISION.
4. APPROPRIATE TRANSITION GASKETS SHALL BE UTILIZED FOR THE SDR OR CLASS OF PVC PIPE.
5. THE PIPE SHALL BE FURNISHED IN NOMINAL LENGTHS OF 20'

C. POLYVINYL CHLORIDE (PVC): PVC PIPE OF 3" NOMINAL DIAMETER AND LESS SHALL CONFORM TO ASTM SPECIFICATION D-2241, "STANDARD SPECIFICATION FOR POLYVINYL CHLORIDE (PVC) PLASTIC PIPE (SDR-PR)", AS IT APPLIES TO CLASS 12454 (A OR B) POLYVINYL CHLORIDE PLASTIC PIPE, SDR 21 WATER PRESSURE RATINGS OF 200 PSI AT 23 C (73.4 F), WITH MINIMUM PHYSICAL REQUIREMENTS AS LISTED IN THE LATEST CURRITUCK COUNTY SPECIFICATIONS AND STANDARDS

1. FITTINGS FOR PVC ¾" – 2" SHALL BE BRASS COMPRESSION X MIP FITTINGS. SOLVENT WELD (GLUE) FITTINGS WILL NOT BE ACCEPTED.

D. PIPE WITH NOMINAL DIAMETERS OF 4" AND LARGER SHALL ASTM SPECIFICATION D-2241, "STANDARD SPECIFICATION FOR POLYVINYL CHLORIDE (PVC) PLASTIC PIPE (SDR-PR)," AS IT APPLIES TO CLASS 12454 (A OR B) POLYVINYL CHLORIDE PLASTIC PIPE, SDR 21 WATER PRESSURE RATINGS OF 200 PSI AT 23°C (73.4°F).

2.2 TAPPING SLEEVES AND VALVES

A. TAPPING SLEEVES: FURNISH AND INSTALL TAPPING SLEEVE AND VALVE AT THE LOCATION(S) SHOWN ON THE CONTRACT DRAWINGS AND AS REQUIRED HEREIN. THE TAPPING SLEEVE AND VALVE SHALL BE SUITABLE FOR WET INSTALLATION WITHOUT INTERRUPTING WATER SERVICE IN ANY MANNER. THE TAPPING SLEEVE AND VALVE SHALL BE INSTALLED IN ACCORDANCE WITH THE MANUFACTURER'S RECOMMENDATIONS AND AS SHOWN ON THE DRAWINGS.

1. THE TAPPING SLEEVE SHALL BE FULLY GASKETED WRAP AROUND TAPPING SLEEVE. THE SLEEVE BODY SHALL BE 18-8 STAINLESS STEEL. THE BOLTS AND NUTS SHALL BE 18-8 STAINLESS STEEL. THE GASKET SHALL BE GRIDDED VIRGIN GPR COMPOUNDED FOR WATER SERVICE. ASTM D2000-80M 4AA607. THE OUTLET GASKET IS A BUNA-N. THE FLANGE SHALL BE DUCTILE IRON. THE TAPPING SLEEVE SHALL BE FITTED WITH A FEMALE ¾" NPT AND SUPPLIED WITH A ¾" PLUG WITH SQUARE HEAD.

B. TAPPING VALVES:

1. TAPPING VALVES SHALL BE "O" RING TYPE WITH MECHANICAL JOINT AND CONFORMING TO AWWA C500-80 NON-RISING STEM CONSTRUCTION. INLET FLANGE END SHALL BE CLASS L25 (ASA BL6.L). THE VALVES SHALL BE AS SPECIFIED UNDER SECTION 2.3 OF THIS SPECIFICATION FOR GATE VALVES.

2.3 VALVES AND FIRE HYDRANTS

A. GATE VALVES: ALL GATE VALVES SHALL BE RESILIENT SEATED WEDGE TYPE THAT FULLY COMPLY WITH THE REQUIREMENTS OF THE LATEST REVISION OF AWWA STANDARD C-509. ALL GATE VALVES SHALL OPEN BY TURNING IN A COUNTERCLOCKWISE DIRECTION. ALL OPERATING NUTS, HAND WHEELS AND CHAIN WHEELS SHALL HAVE THE DIRECTION OF OPENING CAST ON THEM.

1. VALVES 2" AND LARGER SHALL BE IRON BODY, BRONZE MOUNTED, RESILIENT SEAT TYPE.
2. ALL VALVES OTHER THAN FLANGED END VALVES SHALL BE OF THE NON-RISING STEM TYPE.
3. ALL FLANGED GATE VALVES FOR HAND OPERATION SHALL BE OF THE OS&Y TYPE WITH CONVENTIONAL PACKING FOR EITHER WHEEL OR CHAIN OPERATION, AS SHOWN ON THE DRAWINGS AND DETAILS.
4. UNLESS OTHERWISE SHOWN ON THE DRAWINGS OR STATED IN THE PROPOSAL, ALL GATE VALVES 2"-12" SHALL BE DESIGNED FOR A WORKING PRESSURE OF 200 PSI AND SHALL BE TESTED TO A MINIMUM PRESSURE OF 400 PSI.
5. ALL GATE VALVES 14"-24" SHALL BE DESIGNED FOR A WORKING PRESSURE OF 150 PSI AND HYDROSTATICALLY TESTED TO A MINIMUM PRESSURE OF 300 PSI. ALL BURIED VALVES SHALL BE PROVIDED WITH A 2-PIECE SCREW-TYPE VALVE BOX.
6. GATE VALVES SHALL BE OF THE MECHANICAL JOINT TYPE UNLESS OTHERWISE INDICATED ON THE DRAWINGS AND DETAILS.
7. ALL GATE VALVES SHALL BE MANUFACTURED BY THE AMERICAN-DARLING CO., MUELLER CO., M&H VALVE, DRESSER, CLOW, KENNEDY VALVE CO., OR EQUAL.

B. BUTTERFLY VALVES: BUTTERFLY VALVES SHALL CONFORM TO AWWA C-504, LATEST REVISION.

1. ALL VALVES FOR BURIED SERVICE SHALL HAVE CAST IRON BODIES WITH INTEGRALLY CAST MECHANICAL JOINT ENDS CONFORMING TO AWWA C-111, LATEST REVISION.
2. VALVES FOR ABOVE GROUND USE SHALL BE SHORT BODIED WITH FLANGES CONFORMING TO ANSI B16.1, LATEST REVISION.
3. THE VALVE DISCS SHALL BE DESIGNED TO ROTATE 90 DEGREES FROM FULL OPEN TO TIGHT SHUT POSITION AND SHALL HAVE ADJUSTABLE MECHANICAL STOPS TO GOVERN THE ROTATION OF THE DISC.
4. THE VALVE SHALL HAVE A BUNA-N OR A BUNA-S VALVE SEATS WITH BRONZE OR STAINLESS STEEL SEATING RINGS.
5. THE STUFFING BOXES SHALL BE INTEGRALLY CAST WITH THE VALVE BODY.
6. THE SHAFT BEARINGS SHALL BE OF THE SELF-LUBRICATING SLEEVE TYPE WITH THRUST BEARINGS TO KEEP THE VALVE DISC CENTERED.
7. VALVES SHALL BE PRESSURE CLASS 200 UNLESS OTHERWISE SPECIFIED ON THE DRAWINGS.

C. SWING CHECK VALVES:

1. VALVES 2" TO 12": SWING CHECK VALVES SHALL CONFORM TO AWWA C 508, LATEST REVISION.
2. SMALL SWING CHECK VALVES SHALL HAVE IRON BODIES WITH NPT ENDS.
3. THE SWING DISC SHALL BE INTERNALLY WEIGHTED OR SPRING LOADED AND CONSTRUCTED OF COMPOSITION OR BRONZE WITH RUBBER SEATS.
4. VALVES SHALL BE RATED AT 175 LB. SERVICE WATER PRESSURE OR 200 LB. WOG.
5. VALVES FOR USE IN ABOVEGROUND INSTALLATIONS SHALL BE FLANGED WITHOUT SIDE SPRING AND LEVER OR WHEN POSITION.

D. FIRE HYDRANTS: FIRE HYDRANTS SHALL BE OF THE COMPRESSION OR GATE TYPE CONFORMING TO AWWA C-502, LATEST REVISION AND SHALL BE THE OWNER'S STANDARD WHICH CONSISTS OF M &H 129 TRAFFIC MODEL.

1. ALL HYDRANTS SHALL HAVE A BRONZE TO BRONZE MAIN VALVE ASSEMBLY.
2. THE HYDRANT SHALL HAVE TWO 2-1/2" HOSE NOZZLES WITH CAPS AND ONE 4-1/2" STEAMER CONNECTION CONFORMING TO THE CURRITUCK COUNTY WATER SYSTEM STANDARDS.
3. THREADS ON NOZZLES AND CAPS AND OPERATING NUTS SHALL CONFORM TO THOSE ADOPTED BY THE OWNER AS STANDARD.
4. HYDRANTS SHALL OPEN BY TURNING COUNTERCLOCKWISE AND SHALL BE SO MARKED.
5. THE HYDRANT MAIN VALVE SHALL MEET OR EXCEED THE FLOW REQUIREMENTS OF AWWA C-502 AND SHALL BE AT LEAST 5-1/4" IN DIAMETER AND THE HYDRANT ELBOW SHALL BE A 6" MJ END.
6. ELBOW SHALL HAVE INTERIOR COATED WITH MINIMUM 4 MILS THICKNESS EPOXY IN ACCORDANCE WITH AWWA C550.
7. THE HYDRANT BARREL SHALL BE OF SUCH LENGTH TO PROVIDE A MINIMUM OF 3'6" OF BURY.
8. ALL HYDRANTS SHALL BE TRAFFIC MODELS WITH BREAKABLE SAFETY SLEEVE STEM COUPLING WITH SS STEM COUPLING PINS.
9. THE CONTRACTOR SHALL INCLUDE IN THE BASE BID PRICE FOR FIRE HYDRANTS AND ACCESSORIES ALL HYDRANT BARREL EXTENSIONS NECESSARY TO SET THE PUMPER NOZZLE AT THE SPECIFIED HEIGHT AT THE LOCATION SHOWN ON THE DRAWINGS AND DETAILS.
10. HYDRANTS SHALL BE DESIGNED FOR A 300 PSI TEST PRESSURE AND A 150 PSI WORKING
11. PRESSURE. ALL HYDRANTS SHALL BE FACTORY PRIMED AND FINISH PAINTED.
12. FINAL COLOR OF THE HYDRANT BODY SHALL BE RUSTOLEUM ENAMEL OR EQUAL "SAFETY RED".
13. ALL HYDRANTS SHALL BE REPAINTED BY THE CONTRACTOR.
14. PAINTING REQUIREMENTS FOR HYDRANT BONNET:
 6" WATERLINE- RUSTOLEUM ENAMEL OR EQUAL "SAFETY YELLOW"
 8" WATERLINE- RUSTOLEUM ENAMEL OR EQUAL "SAFETY ORANGE"
 10" AND LARGER WATERLINE- RUSTOLEUM ENAMEL OR EQUAL "SAFETY GREEN"

2.4 BACKFLOW PREVENTERS

A. ALL EXISTING AND PROPOSED WATER SERVICES, DEDICATED FIRE AND IRRIGATION LINES AND PRIVATE DISTRIBUTION SYSTEMS MUST BE PROVIDED WITH AN APPROVED BACKFLOW PREVENTION ASSEMBLY IN ACCORDANCE WITH THE CURRITUCK COUNTY CODE OF ORDINANCES – CHAPTER 13 – WATER AND SEWERS, ARTICLE IV – CROSS CONNECTION CONTROL AND THE RULES GOVERNING PUBLIC WATER SYSTEMS AS FOUND IN TITLE 15A, SUBCHAPTER 18C OF THE NORTH CAROLINA ADMINISTRATIVE CODE.

B. APPROVED BACKFLOW PREVENTION ASSEMBLIES SHALL BE INSTALLED ABOVE GROUND. ASSEMBLIES MAY BE INSTALLED INSIDE OF BUILDINGS AS LONG AS THERE ARE NO UNPROTECTED TAPS BETWEEN THE MAIN AND THE BUILDING.

C. THE BACKFLOW PREVENTION ASSEMBLY(S) MUST BE READILY ACCESSIBLE AT ALL TIMES. READILY ACCESSIBLE MEANS THAT ONLY A ONE PIECE COVER MUST BE REMOVED FOR AN OUTSIDE INSTALLATION TO TEST OR PERFORM MAINTENANCE ON THE ASSEMBLY.

D. BACKFLOW PREVENTION ASSEMBLIES MUST BE INSTALLED, TESTED AND MAINTAINED BY PERSONS THAT HAVE AN APPROVED C ROSS CONNECTION SCHOOL. IT IS ALSO REQUIRED THAT ALL ASSEMBLIES BE TESTED AT THE TIME OF INSTALLATION AND ANNUALLY THEREAFTER. ALL ASSEMBLIES MUST ALSO HAVE THE RUBBER PARTS CHANGED EVERY FIVE YEARS.

2.5 FIRE HYDRANT LOCATION MARKERS

A. CONTRACTOR SHALL INSTALL AT ALL HYDRANT LOCATIONS A REFLECTIVE HYDRANT MARKER, STIMPSONITE, MODEL 88AB, TWO-WAY BLUE REFLECTOR IN CENTERLINE OF PAVEMENT PERPENDICULAR TO HYDRANT LOCATION USING E-BOND EPOXY ADHESIVE 1240/1241 PER MANUFACTURER'S SPECIFICATIONS.

2.6 VALVE LOCATION MARKERS

A. ALL VALVE LOCATIONS AND BLOW OFFS SHALL BE MARKED WITH A CONCRETE VALVE MARKER WITH A METAL COIN ON TOP SHOWING VALVE SIZE, DISTANCE, AND DIRECTION.

2.7 UNDERGROUND PIPE MARKERS

A. PLASTIC RIBBON TAPE: ACID- AND ALKALI-RESISTANT POLYETHYLENE FILM WARNING TAPE MANUFACTURED FOR MARKING AND IDENTIFYING UNDERGROUND UTILITIES, 3 INCHES WIDE AND 4 MILS THICK MINIMUM, CONTINUOUSLY INSCRIBED WITH A DESCRIPTION OF THE UTILITY, WITH METALLIC CORE ENCASED IN A PROTECTIVE JACKET FOR CORROSION PROTECTION, DETECTABLE BY METAL DETECTOR WHEN TAPE IS BURIED UP TO 2'-6" DEEP. TAPE SHALL BE ALARMTAPE BY PAUL POTTER ASSOCIATES, DETECTATAPE BY ALLEN SYSTEMS, INC., TERRA TAPE BY GRIFFOLYN CO., INC., OR APPROVED EQUAL.

B. COLOR: BLUE

C. TEXT: "CAUTION – WATER LINE BURIED BELOW".

D. DETECTABLE TRACER WIRE: AT ALL LOCATIONS WHERE PRESSURE PIPING IS INSTALLED AND AT LATERAL LOCATIONS, NON-FERROUS OR FERROUS MATERIALS, THE CONTRACTOR SHALL INSTALL A CONTINUOUS LENGTH OF #12 SOLID COPPER WIRE, ON TOP AND PARALLEL TO THE PIPE.

2.8 BEDDING AND COVER MATERIALS

A. BEDDING: NCDOT #57 OR #67 STONE.

1. INSTALL STONE BEDDING ONLY AT THE DIRECTION OF THE COUNTY ENGINEERING DEPARTMENT.

B. SOIL BACKFILL FROM ABOVE PIPE TO FINISH GRADE:

1. FOR ANY TRENCHES WITH WATER, SANITARY, OR STORM SEWER UTILITIES THAT ARE NOT LOCATED UNDER CURB OR PAVED AREAS, BACKFILL USING ON-SITE SUITABLE SOIL WHEN AVAILABLE
2. FOR ANY TRENCHES WITH WATER, SANITARY, OR STORM SEWER UTILITIES THAT ARE LOCATED UNDER CURB OR PAVED AREAS, BACKFILL USING ONLY APPROVED OFF-SITE SELECT BORROW.

2.9 ACCESSORIES

A. ANCHORAGES:

1. CONCRETE REACTION BACKING: PORTLAND CEMENT CONCRETE MIX, 3000 PSI.
 a. CEMENT: ASTM C 150, TYPE I.
 b. FINE AGGREGATE: ASTM C33, SAND.
 c. COARSE AGGREGATE: ASTM C33, CRUSHED GRAVEL.
 d. WATER: POTABLE.

B. STEEL RODS, BOLT, LUGS AND BRACKETS: ASTM A36/A36M OR ASTM A307 CARBON STEEL.

C. PROTECTIVE COATING: BITUMINOUS COATING.

DISINFECTING OF WATER DISTRIBUTION

2.1 DISINFECTION CHEMICALS

A. CHEMICALS: AWWA B303, SODIUM CHLORITE.

PART 3 EXECUTION

3.1 EXAMINATION AND PREPARATION

A. VERIFY PIPING SYSTEM HAS BEEN CLEANED, INSPECTED, AND PRESSURE TESTED.

B. PERFORM SCHEDULING AND DISINFECTING ACTIVITY WITH START-UP, WATER PRESSURE TESTING, ADJUSTING AND BALANCING, DEMONSTRATION PROCEDURES, INCLUDING COORDINATION WITH RELATED SYSTEMS.

3.2 INSTALLATION

A. BEFORE BEING PLACED INTO SERVICE, AND BEFORE CERTIFICATION OF COMPLETION BY THE COUNTY ENGINEERING DEPARTMENT, ALL NEW WATER SYSTEMS, OR EXTENSIONS TO EXISTING SYSTEMS OR VALVED SECTION OF SUCH EXTENSIONS, OR ANY REPLACEMENT IN THE EXISTING WATER SYSTEM, OR ANY EXPOSED SECTION OF THE EXISTING SYSTEM SHALL BE DISINFECTED, ACCORDING TO TH E REQUIREMENTS OF THE NORTH CAROLINA ADMINISTRATIVE CODE TITLE 15A, SUBCHAPTER 18C, SECTION .1000.

B. ".2201 DISINFECTION OF NEW SYSTEMS"

1. ALL INTERIOR SURFACES OF NEW POTABLE WATER SUPPLY SYSTEMS, INCLUDING WELLS, FILTERS, STORAGE TANKS AND DISTRIBUTION LINES SHALL BE THOROUGHLY DISINFECTED BY MEANS OF HYPOCHLORITE OR CHLORINE SOLUTIONS, AFTER WHICH BACTERIOLOGICAL TEST SAMPLES SHALL BE COLLECTED.
2. AFTER DISINFECTION THE WATER SUPPLY SHALL NOT BE PLACED INTO SERVICE UNTIL BACTERIOLOGICAL TEST RESULTS OF REPRESENTATIVE WATER SAMPLES ANALYZED IN AN APPROVED LABORATORY ARE FOUND TO BE SATISFACTORY."

C. ".2203 DISINFECTION OF STORAGE TANKS AND DISTRIBUTION SYSTEMS"

1. WATER DISTRIBUTION SYSTEMS, INCLUDING STORAGE TANKS AND WATER MAINS, AFTER FLUSHING TO REMOVE SEDIMENT AND OTHER FOREIGN MATTER, AND AFTER TESTING FOR LEAKS, SHALL BE DISINFECTED BY THE ADDITION AND THOROUGH DISPERSION OF A CHLORINE SOLUTION IN CONCENTRATIONS SUFFICIENT TO PRODUCE A CHLORINE RESIDUAL OF AT LEAST 50 MILLIGRAMS PER LITER (OR PPM) IN THE WATER THROUGHOUT THE DISTRIBUTION SYSTEM, INCLUDING ALL WATER MAINS AND STORAGE TANKS.
2. THE CHLORINE SOLUTION SHALL REMAIN IN CONTACT WITH INTERIOR SURFACES OF THE WATER SYSTEM FOR A PERIOD OF 24 HOURS. THEN THE WATER SYSTEM SHALL BE FLUSHED WITH FRESH WATER FROM AN APPROVED WATER SOURCE UNTIL THE CHLORINE SOLUTION IS DISPELLED. ALL PIPING SYSTEMS SHALL BE THOROUGHLY FLUSHED BY PROVIDING A VELOCITY OF 2 FEET PER SECOND IN THE LINE BEING FLUSHED.
3. REPRESENTATIVE SAMPLES OF THE WATER SHALL THEN BE COLLECTED WHEN RESIDUAL CHLORINE CONCENTRATION IS APPROXIMATELY 2 PPM. IF BACTERIOLOGICAL TESTS OF THE SAMPLES INDICATE THAT THE WATER QUALITY IS SATISFACTORY, THE WATER MAINS AND STORAGE TANKS MAY BE PLACED IN SERVICE.
4. IN UNUSUAL SITUATIONS WHERE LARGE VOLUME TANKS ARE INVOLVED AND WHERE THERE IS NOT SUFFICIENT WATER AVAILABLE TO FILL THE TANK OR THERE IS NOT AVAILABLE A SUITABLE DRAINAGE AREA FOR THE CHLORINATED WATER, AN ALTERNATE DISINFECTION PROCEDURE FOR TANKS MAY BE PROPOSED. SUCH PROPOSAL MUST BE SUBMITTED IN WRITING COMPLETELY DESCRIBING THE PROPOSED DISINFECTION PROCEDURE AND SUBSTANTIATING THE NEED FOR AN ALTERNATE PROCEDURE IN THE PARTICULAR CIRCUMSTANCE. SUCH ALTERNATE PROCEDURE MUST BE APPROVED BEFORE BEING IMPLEMENTED. THE CONCLUSION OF THE DEPARTMENT SHALL BE FINAL."
5. AT LOCATIONS WHERE NEW WATER LINES ARE TO BE TIED INTO THE EXISTING SYSTEM, THE INTERIOR OF ALL NEW FITTINGS AND VALVES REQUIRED SHALL BE BATHED WITH A CONCENTRATED CHLORINE SOLUTION AT THE TIME OF INSTALLATION. WATER SHALL BE FLUSHED THROUGH THE NEW VALVE A SUFFICIENT TIME TO WASH OUT THE CHLORINE SOLUTION BEFORE CLOSING THE VALVE AND INSTALLING ADDITIONAL PIPE. THE NEW VALVE SHALL REMAIN CLOSED UNTIL THE NEW SECTION OF PIPE TO BE INSTALLED HAS PASSED ALL TESTS.
6. THE CONTRACTOR SHALL BE REQUIRED TO MAKE ARRANGEMENTS FOR HAVING TESTS CONDUCTED. ALL EXPENSES INCURRED IN MAKING TESTS SHALL BE BORNE BY THE CONTRACTOR AND SHOULD BE INCLUDED IN HIS BID PER LINEAR FOOT OF PIPE MATERIAL.

3.3 FIELD QUALITY CONTROL

A. DISINFECTION AND FLUSHING:

1. DISINFECT PIPELINE INSTALLATION IN ACCORDANCE WITH AWWA C651. USE OF LIQUID CHLORINE IS NOT PERMITTED.
2. UPON COMPLETION OF RETENTION PERIOD REQUIRED FOR DISINFECTION, FLUSH PIPELINE UNTIL CHLORINE CONCENTRATION IN WATER LEAVING PIPELINE IS NO HIGHER THAN THAT GENERALLY PREVAILING IN EXISTING SYSTEM OR IS ACCEPTABLE FOR DOMESTIC USE.
3. LEGALLY DISPOSE OF CHLORINATED WATER. WHEN CHLORINATED DISCHARGE MAY CAUSE DAMAGE TO ENVIRONMENT, APPLY NEUTRALIZING CHEMICAL TO CHLORINATED WATER TO NEUTRALIZE CHLORINE RESIDUAL REMAINING IN WATER.
4. CHLORINE SOLUTION SHALL BE COLLECTED IN AN APPROVED CONTAINER AND DECHLORINATED USING ONE OF THE FOLLOWING SOLUTIONS OR AN APPROVED EQUIVALENT: SULFUR DIOXIDE, SODIUM BISULFITE, SODIUM SULFITE, OR SODIUM THIOSULFATE. DECHLORINATED WATER SHALL BE DISPOSED OF ON SITE.

MSA, P.C.
Environmental Sciences • Planning • Surveying
Civil & Environmental Engineering • Landscape Architecture
5033 Rouse Drive, Virginia Beach, VA 23462
757-490-9264 (Ofc) 757-490-0634 (Fax)
www.msaonline.com

NORTH CAROLINA PROFESSIONAL ENGINEER SEAL 031728 C. SCOTT ACEY 09/22/16

DESIGNED CJL
DRAWN CJL
CHECKED CSA
APPROVED CSA
DATE 09/22/16

REV. NO. | REV. BY | REVISION DESCRIPTION | REVISION DATE

THIS DOCUMENT IS THE SOLE PROPERTY OF MSA, P.C., VIRGINIA BEACH, VA. THE MODIFICATION OF ANY DETAIL OR DESIGN OR USE FOR ANY PURPOSE OTHER THAN THAT INTENDED BY MSA, P.C. MAY NOT BE MADE WITHOUT THE EXPRESS WRITTEN CONSENT OF MSA, P.C.

NOTES AND DETAILS
of
COUNTRYSIDE ESTATES SINGLE-FAMILY SUBDIVISION
GPIN 8022-39-7183
(MB 21, PG 85, CHES., VA)
MOYOCK TOWNSHIP CURRITUCK COUNTY, NC

SCALE: AS SHOWN
PROJ. NO.: 15021

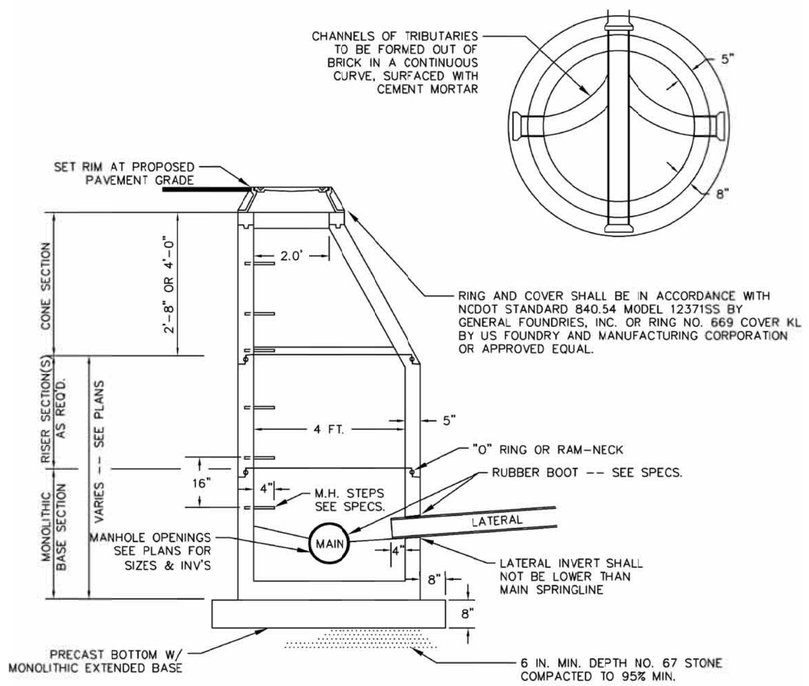

TYPICAL PRECAST CONCRETE SANITARY SEWER MANHOLE DETAIL

NTS

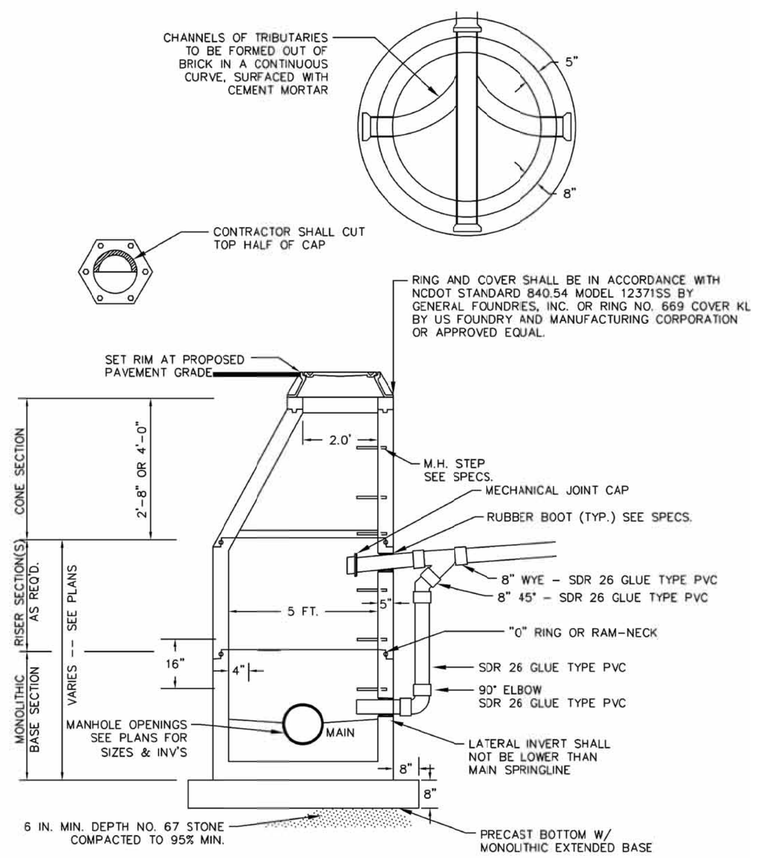

OUTSIDE DROP SANITARY SEWER MANHOLE DETAIL

NTS

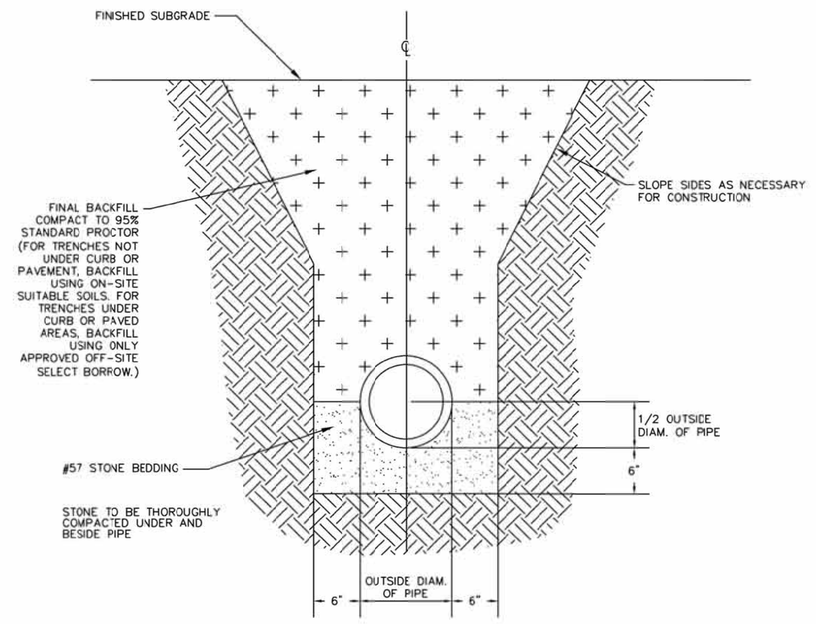

TYPICAL SANITARY SEWER MAIN TRENCH

NTS

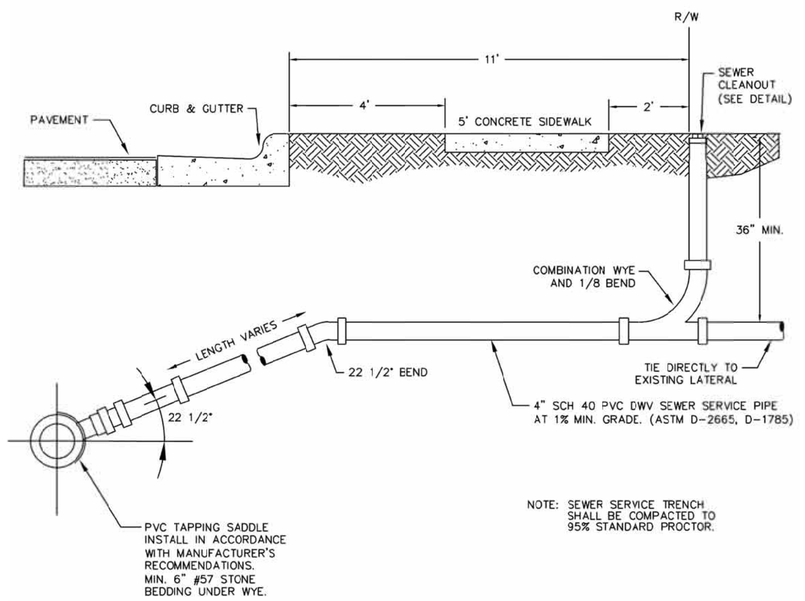

PVC SANITARY SEWER SERVICE

NTS

TRENCH WIDTH TABLE	
PIPE SIZE (IN.)	MAX. TRENCH WIDTH (FT.)
6-8	3.00
10	3.50
12	3.50
15	4.00
18	4.00
24	4.50

TYPICAL TRENCH DETAIL FOR PRESSURE PIPE

NTS

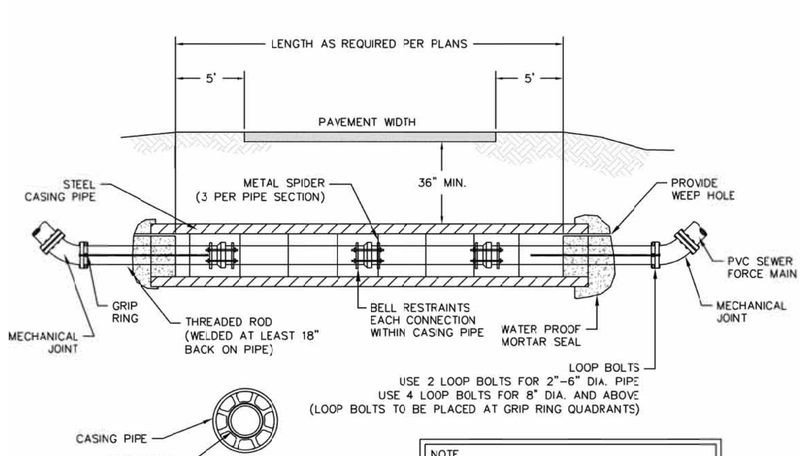

NOTE
1. CASING PIPE SHALL BE 2 X DIAMETER OF THE SEWER FORCE MAIN OR AS SPECIFIED ON THE PLANS CASING PIPE TO BE STEEL PIPE (ASTM 252, GRADE 2 OR 3) WALL THICKNESS TO MEET NCDOT SPECIFICATIONS
2. TIE END OF CASING PIPE TO FIRST FITTING OR VALVE WITH THREADED ROC

STEEL CASING DETAIL

NTS

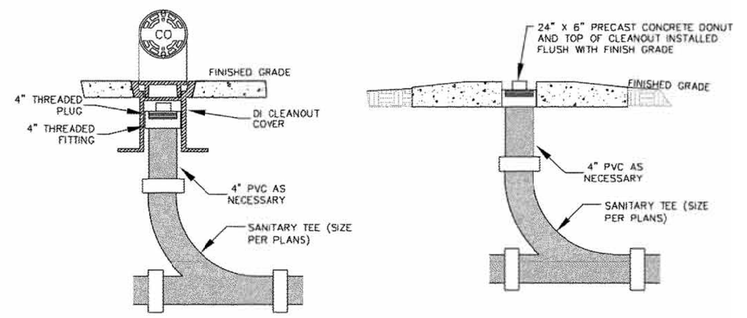

SANITARY SEWER CLEAN-OUT

NTS

STATE OF NORTH CAROLINA DEPT. OF TRANSPORTATION DIVISION OF HIGHWAYS RALEIGH, N.C.

1-12

ENGLISH STANDARD DRAWING FOR **BRICK CATCH BASIN** 12" THRU 54" PIPE

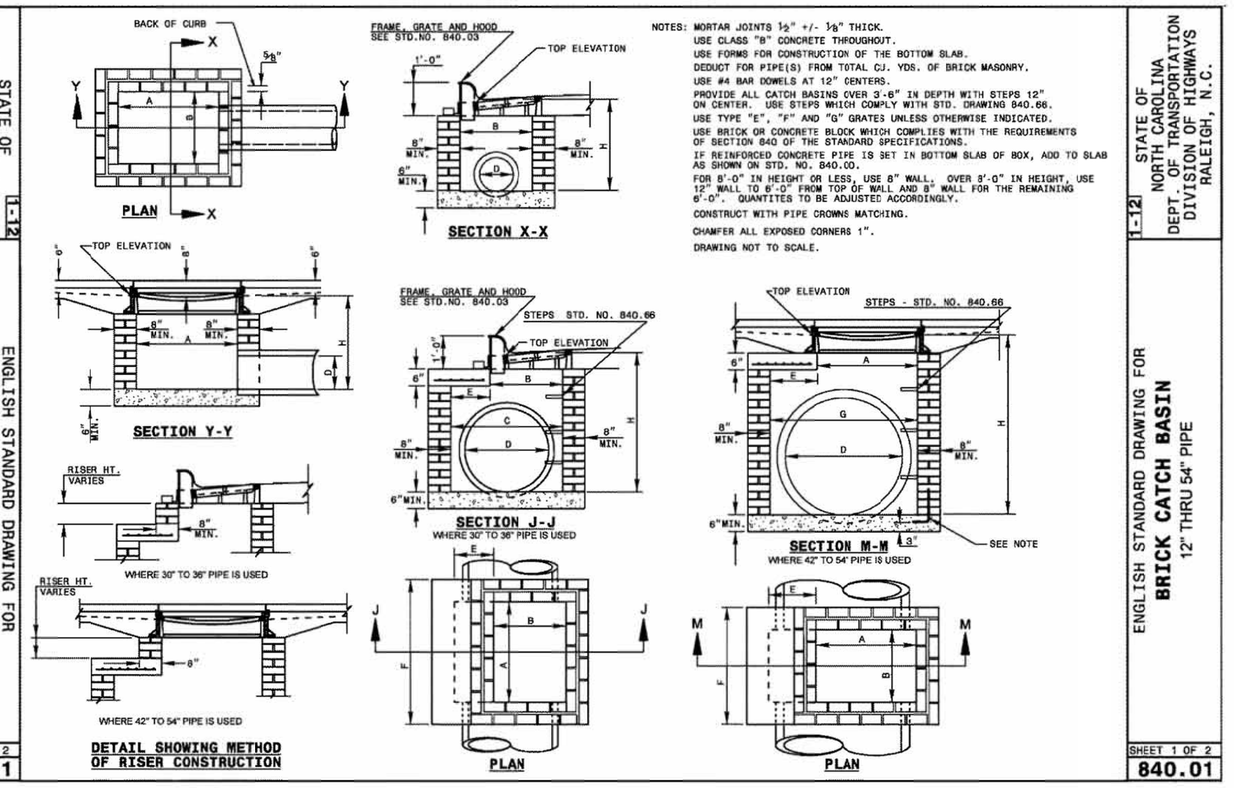

NOTES: MORTAR JOINTS ½" +/- ¼" THICK.
USE CLASS "B" CONCRETE THROUGHOUT.
USE FORMS FOR CONSTRUCTION OF THE BOTTOM SLAB.
DEDUCT FOR PIPE(S) FROM TOTAL CU. YDS. OF BRICK MASONRY.
USE #4 BAR DOWELS AT 12" CENTERS.
PROVIDE ALL CATCH BASINS OVER 3'-6" IN DEPTH WITH STEPS 12" ON CENTER. USE STEPS WHICH COMPLY WITH STD. DRAWING 840.66.
USE TYPE "E", "F" AND "G" GRATES UNLESS OTHERWISE INDICATED.
USE BRICK OR CONCRETE BLOCK WHICH COMPLIES WITH THE REQUIREMENTS OF SECTION 840 OF THE STANDARD SPECIFICATIONS.
IF REINFORCED CONCRETE PIPE IS SET IN BOTTOM SLAB OF BOX, ADD TO SLAB AS SHOWN ON STD. NO. 840.00.
FOR 8'-0" IN HEIGHT OR LESS, USE 8" WALL. OVER 8'-0" IN HEIGHT, USE 12" WALL TO 8'-0" FROM TOP OF WALL AND 8" WALL FOR THE REMAINING 6'-0". QUANTITES TO BE ADJUSTED ACCORDINGLY.
CONSTRUCT WITH PIPE CROWNS MATCHING.
CHAMFER ALL EXPOSED CORNERS 1".
DRAWING NOT TO SCALE.

STATE OF NORTH CAROLINA DEPT. OF TRANSPORTATION DIVISION OF HIGHWAYS RALEIGH, N.C.

1-12

ENGLISH STANDARD DRAWING FOR **BRICK CATCH BASIN** 12" THRU 54" PIPE

SHEET 1 OF 2 **840.01**

STATE OF NORTH CAROLINA DEPT. OF TRANSPORTATION DIVISION OF HIGHWAYS RALEIGH, N.C.

1-12

ENGLISH STANDARD DRAWING FOR **BRICK CATCH BASIN** 12" THRU 54" PIPE

SHEET 1 OF 2 **840.01**

STATE OF NORTH CAROLINA DEPT. OF TRANSPORTATION DIVISION OF HIGHWAYS RALEIGH, N.C.

1-12

ENGLISH STANDARD DRAWING FOR **BRICK CATCH BASIN** 12" THRU 54" PIPE

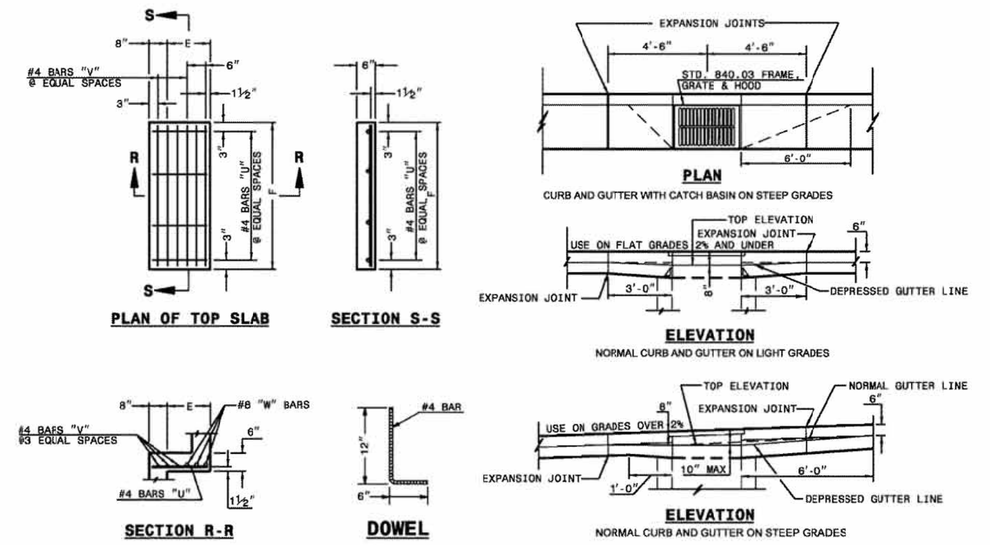

MINIMUM DIMENSIONS AND QUANTITIES FOR BRICK CATCH BASIN(BASED ON MIN. HEIGHT, H, WITH NO RISER)*

DIMENSIONS OF BOX AND PIPE						TOP SLAB DIMENSIONS		BARS-U		BARS-V		BARS-W			CU.YDS. CONC. IN BOX		BRICK MASONRY		DEDUCTIONS ONE PIPE	
PIPE	SPAN	WIDTH	WIDTH	SPAN	MIN. HEIGHT			NO.	LENGTH	NO.	LENGTH	NO.	LENGTH	TOTAL LBS.	TOP SLAB	BOTTOM SLAB	TOTAL CONC.	BRICK MSY. IN WALL	TOTAL BRICK MSY. CONCRETE	C.W.	R.C.
D	A	B	C	G	H	E	F														
12"	3'-0"	2'-2"	--	--	2'-9"	--	--	--	--	--	--	--	--	--	--	0.281	0.281	0.883	1.164	0.020	0.042
15"	3'-0"	2'-2"			3'-0"											0.281	0.281	0.963	1.244	0.031	0.047
18"	3'-0"	2'-2"			3'-3"											0.281	0.281	1.043	1.324	0.044	0.055
24"	3'-0"	2'-2"			3'-9"											0.281	0.281	1.204	1.485	0.078	0.121
30"	3'-0"	2'-2"	3'-4"		4'-3"	1'-2"	4'-4"	4	1'-6"	3	4'-1"	3	4'-1"	45	0.147	0.374	0.521	1.606	2.217	0.122	0.184
36"	3'-0"	2'-2"	3'-10"		4'-9"	1'-8"	4'-4"	4	2'-0"	4	4'-1"	3	4'-1"	49	0.187	0.415	0.602	1.874	2.518	0.178	0.261
42"	3'-0"	2'-2"		4'-5"	5'-3"	1'-5"	3'-6"	4	1'-9"	3	3'-3"	3	3'-3"	38	0.135	0.373	0.508	2.152	2.660	0.240	0.371
48"	3'-0"	2'-2"		5'-0"	5'-9"	2'-0"	3'-6"	4	2'-6"	4	3'-3"	3	3'-3"	41	0.173	0.410	0.583	2.419	2.998	0.313	0.477
54"	3'-0"	2'-2"		5'-7"	6'-3"	2'-7"	3'-8"	4	3'-0"	6	3'-3"	3	3'-3"	47	0.211	0.448	0.659	2.926	3.585	0.396	0.585

* RISER HAS .321 CUBIC YARDS OF BRICK MASONRY PER FOOT HEIGHT

STATE OF NORTH CAROLINA DEPT. OF TRANSPORTATION DIVISION OF HIGHWAYS RALEIGH, N.C.

1-12

ENGLISH STANDARD DRAWING FOR **BRICK CATCH BASIN** 12" THRU 54" PIPE

SHEET 2 OF 2 **840.01**

MSA, P.C.
Environmental Sciences • Planning • Surveying
Civil & Environmental Engineering • Landscape Architecture
5033 Rouse Drive, Virginia Beach, VA 23462
757-490-9264 (Ofc) 757-490-0634 (Fax)
www.msaonline.com

NORTH CAROLINA PROFESSIONAL ENGINEER SEAL 037291 09/22/16 CHRISTOPHER C. SCOTT

DESIGNED	C.S.
DRAWN	C.S.
CHECKED	C.S.A
APPROVED	C.S.A
DATE	09/22/16

NO.	REVISIONS	DESCRIPTION	DATE
1			
2			
3			
4			
5			
6			

THIS DOCUMENT IS THE SOLE PROPERTY OF MSA, P.C., VIRGINIA BEACH, VA. THE REPRODUCTION OF ANY DETAIL OR DESIGN IN WHOLE OR IN PART OR ANY USE OF THIS DOCUMENT OR ANY DETAIL OR DESIGN CONTAINED THEREIN FOR ANY PURPOSE OTHER THAN THAT INTENDED BY MSA, P.C. IS WITHOUT THE WRITTEN CONSENT OF MSA, P.C. AND SHALL BE AT THE USER'S SOLE RISK AND WITHOUT LIABILITY TO MSA, P.C.

NOTES AND DETAILS of
COUNTRYSIDE ESTATES SINGLE-FAMILY SUBDIVISION
GPIN 8022-39-7183
(MB 21, PG 85, CHES., VA)
MOYOCK TOWNSHIP CURRITUCK COUNTY, NC

SHEET
C7.3
31 of 43 Sheets

SCALE: AS SHOWN

PROJ. NO.: 15021

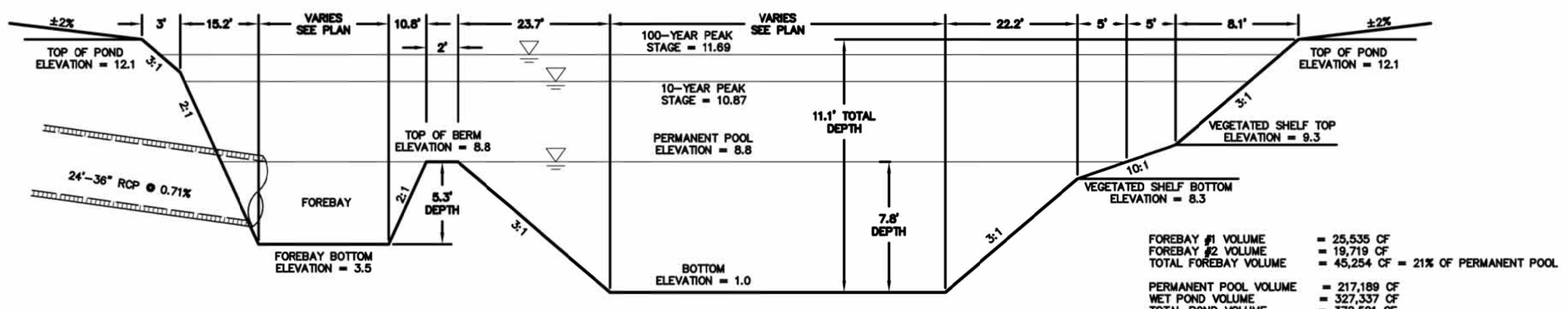

FOREBAY #1 VOLUME = 25,535 CF
FOREBAY #2 VOLUME = 19,719 CF
TOTAL FOREBAY VOLUME = 45,254 CF = 21% OF PERMANENT POOL

PERMANENT POOL VOLUME = 217,189 CF
WET POND VOLUME = 327,337 CF
TOTAL POND VOLUME = 372,591 CF

SKIMMER BASIN/WET DETENTION BMP#1 SECTION (1–1)

NOT TO SCALE

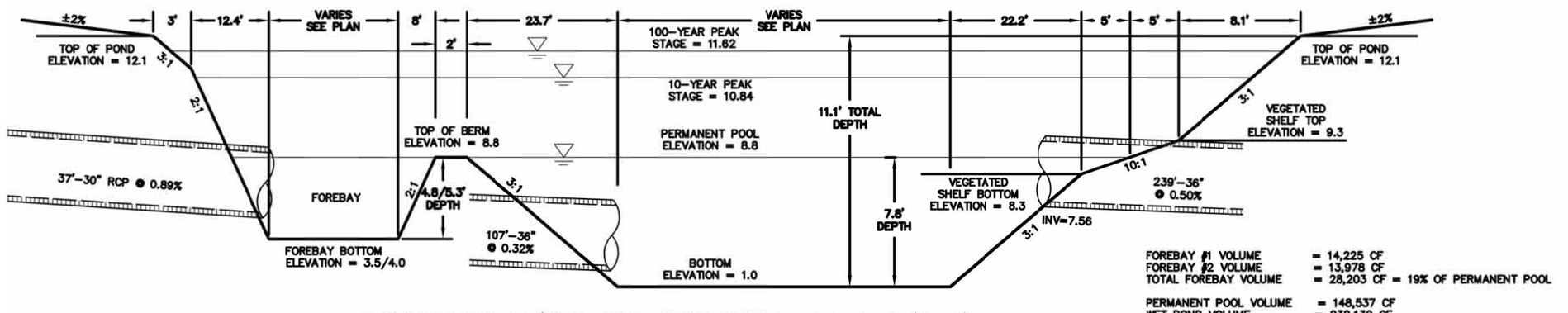

FOREBAY #1 VOLUME = 14,225 CF
FOREBAY #2 VOLUME = 13,978 CF
TOTAL FOREBAY VOLUME = 28,203 CF = 19% OF PERMANENT POOL

PERMANENT POOL VOLUME = 148,537 CF
WET POND VOLUME = 238,130 CF
TOTAL POND VOLUME = 286,333 CF

SKIMMER BASIN/WET DETENTION BMP#2 SECTION (2–2)

NOT TO SCALE

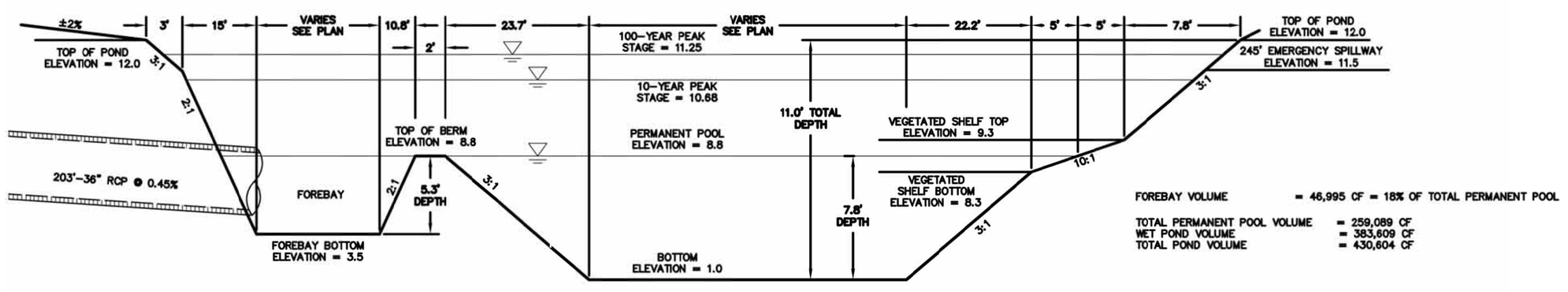

FOREBAY VOLUME = 46,995 CF = 18% OF TOTAL PERMANENT POOL

TOTAL PERMANENT POOL VOLUME = 259,089 CF
WET POND VOLUME = 383,609 CF
TOTAL POND VOLUME = 430,604 CF

SKIMMER BASIN/WET DETENTION BMP#3 SECTION (3a–3a)

NOT TO SCALE

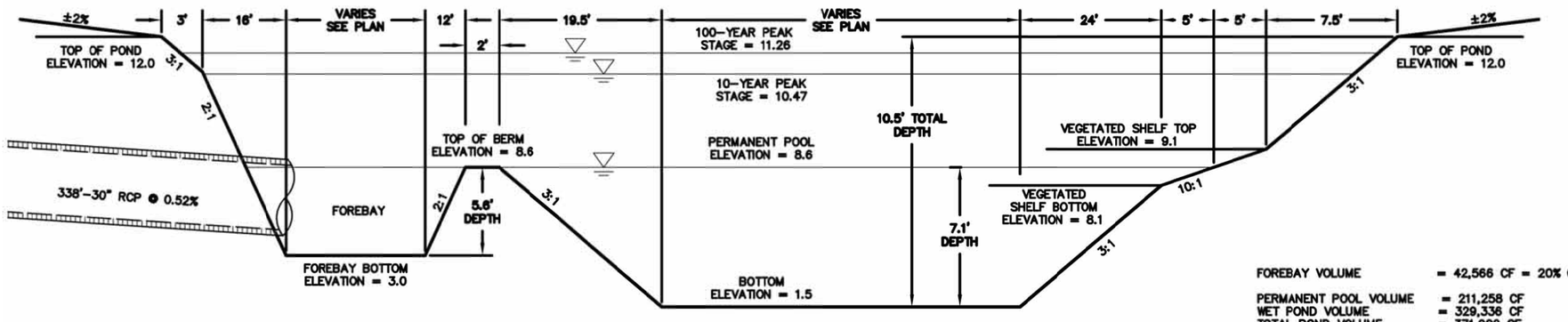

FOREBAY VOLUME = 42,566 CF = 20% OF PERMANENT POOL

PERMANENT POOL VOLUME = 211,258 CF
WET POND VOLUME = 329,336 CF
TOTAL POND VOLUME = 371,902 CF

SKIMMER BASIN/WET DETENTION BMP#4 SECTION (4a–4a)

NOT TO SCALE

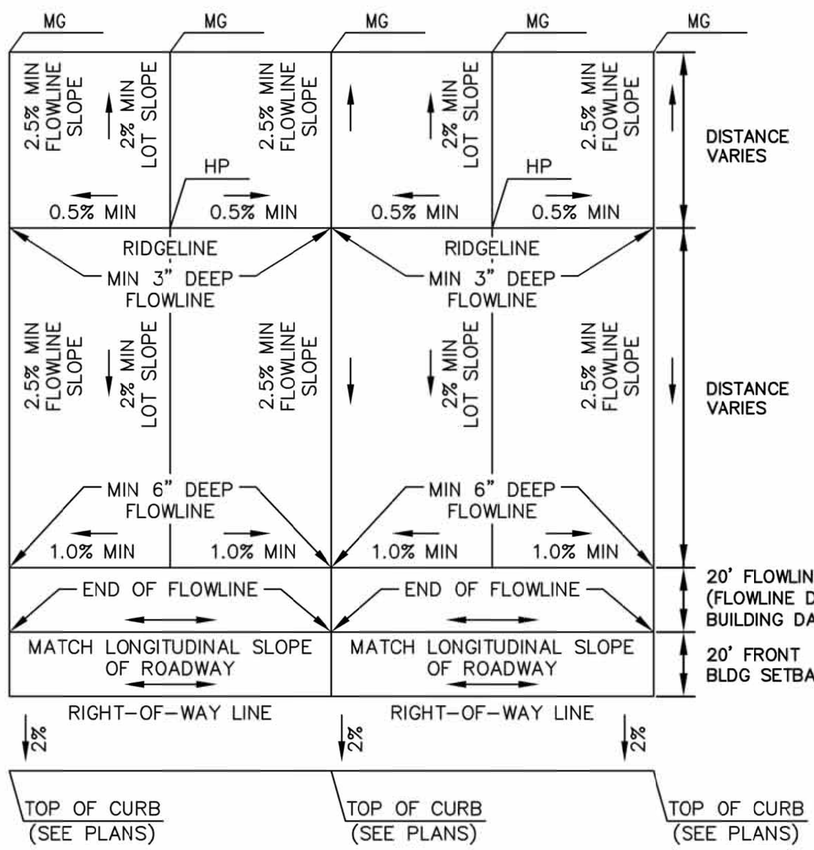

TYPICAL LOT GRADING

NOT TO SCALE

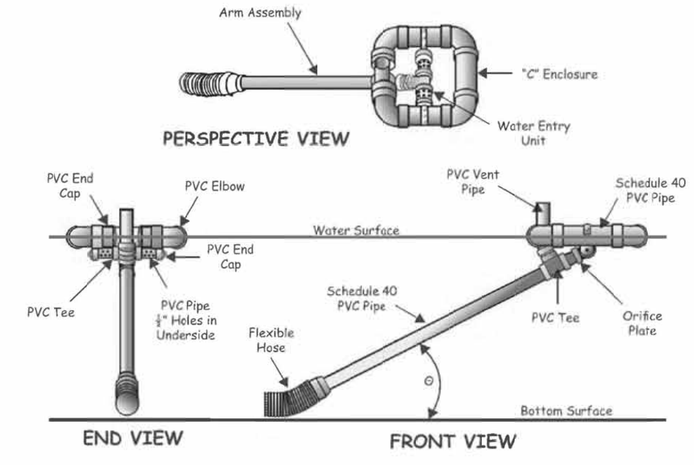

Figure 6.64a Schematic of a skimmer, from Pennsylvania Erosion and Sediment Pollution Control Manual, March, 2000.

SKIMMER DEVICE STANDARD DETAIL

NOT TO SCALE

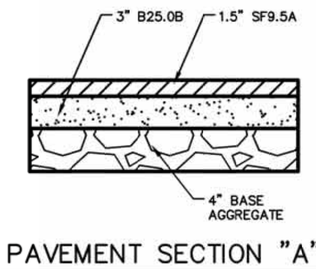

PAVEMENT SECTION "A"

NOT TO SCALE

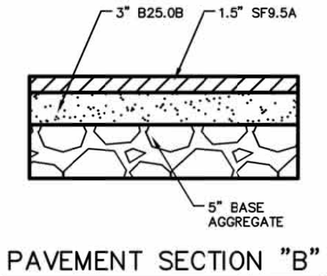

PAVEMENT SECTION "B"

NOT TO SCALE

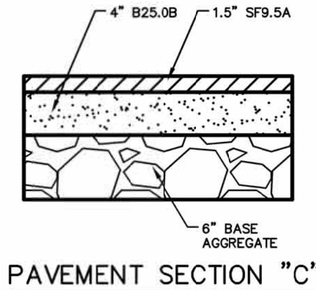

PAVEMENT SECTION "C"

NOT TO SCALE

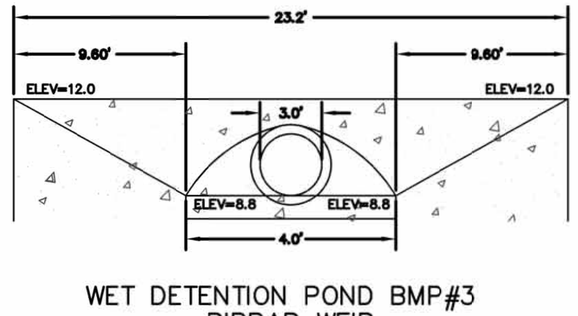

WET DETENTION POND BMP#3
RIPRAP WEIR
SECTION (3b–3b)

NOT TO SCALE

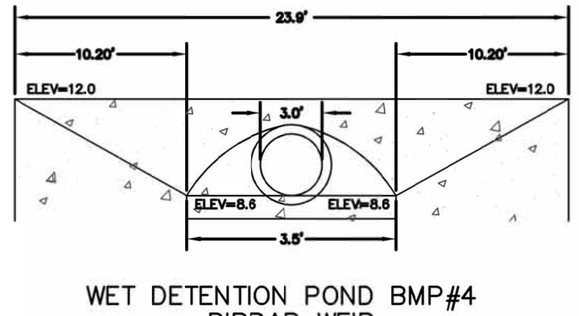

WET DETENTION POND BMP#4
RIPRAP WEIR
SECTION (4b–4b)

NOT TO SCALE

MSA, P.C.
Environmental Sciences • Planning • Surveying
Civil & Environmental Engineering • Landscape Architecture
5033 Rouse Drive, Virginia Beach, VA 23462
757-490-9264 (Ofc) 757-490-0634 (Fax)
www.msaonline.com

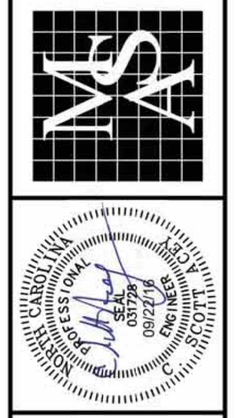

DESIGNED	CJL	
DRAWN	CJL	
CHECKED	CSA	
APPROVED	CSA	
DATE	09/22/16	

NO.	DESCRIPTION	BY	DATE

THIS DOCUMENT IS THE SOLE PROPERTY OF MSA, P.C., VIRGINIA BEACH, VA. THE REPRODUCTION OF ANY PORTION, OR OTHER THAN THAT INTENDED BY MSA, P.C. MAY NOT BE MADE WITHOUT THE EXPRESS WRITTEN CONSENT OF MSA, P.C.

NOTES AND DETAILS
of
COUNTRYSIDE ESTATES SINGLE-FAMILY SUBDIVISION
GPIN 8022-39-7183
(MB 21, PG 85, CHES., VA)

CURRITUCK COUNTY, NC
MOYOCK TOWNSHIP

SHEET
C7.4
32 of 43 Sheets

SCALE: AS SHOWN

PROJ. NO.: 15021

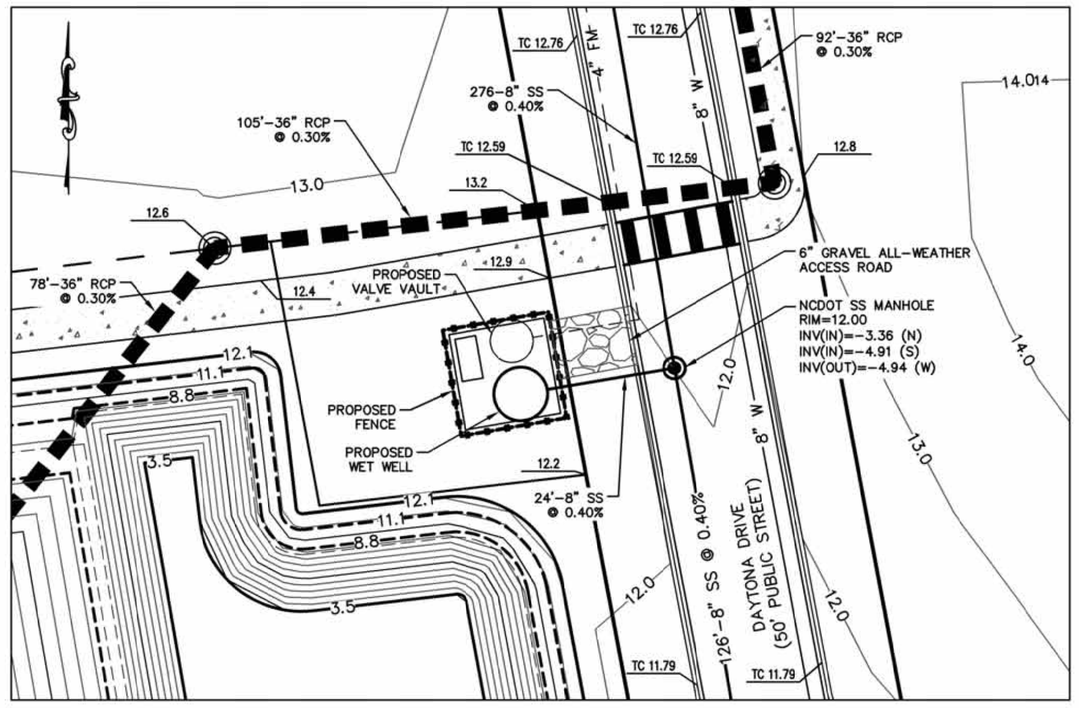

PUMP STATION PLAN VIEW

SCALE: 1" = 20'

NOTES:

1. THIS PUMP STATION HAS BEEN DESIGNED TO COMPLY WITH NCAC 15A 2T.0305 AND MEETS OR EXCEEDS ALL REQUIREMENTS OF FAST-TRACK PERMITTING, MINIMUM DESIGN CRITERIA.
2. DESIGN PUMPING CAPACITY: 126 GPM @ 101.6' TOTAL DYNAMIC HEAD (TDH)
3. PUMP SELECTION: KEEN PUMP KG(X)10
   IMPELLER DIAMETER: 6.3125"
   SPEED: 3600 RPM
   10 HP MINIMUM
   3 PHASE, 60 HZ
4. ALL HATCHES SHALL BE PADLOCKED AT ALL TIMES.
5. ALL DISCHARGE PIPING SHALL BE SCH 40 PVC CONFORMING TO ASTM D1785.
6. ALL CONTROL SYSTEM ENCLOSURES SHALL BE NEMA 4X RATED.
7. ALL TANKS SHALL BE LEAK TESTED UTILIZING A STATIC WATER TEST AS SPECIFIED.
8. ALL COMPONENTS WITHIN THE PUMP TANK SHALL BE STAINLESS STEEL INCLUDING GUIDE RAILS, BRACKETS, BOLTS, LIFTING CHAIN, ETC.
9. PRECAST INLET BOOTS SHALL BE PROVIDED BY PRECAST LIFT STATION MANUFACTURER. ALL OPENINGS SHALL BE GROUTED.
10. AN ALL WEATHER ACCESS ROAD SHALL BE PROVIDED TO THE LIFT STATION.
11. THE WET WELL, VALVE VAULT, & CONTROL PANELS SHALL BE SECURELY LOCKED AT ALL TIMES.
12. CONTRACTOR TO BE RESPONSIBLE FOR VERIFYING EXISTING POWER VOLTAGE AND PHASE PRIOR TO ORDERING PUMPS & CONTROLS.
13. PUMP STATION DESIGN SPECIFICATIONS TO CONFORM TO LATEST ASTM C478 SPECIFICATIONS FOR "PRECAST REINFORCED CONCRETE MANHOLE SECTIONS." CONCRETE COMPRESSIVE STRENGTH SHALL BE 4000 PSI MINIMUM. MANHOLE STEPS SHALL BE STEEL REINFORCED COPOLYMER POLYPROPYLENE PLASTIC STEPS WHICH CONFORM TO LATEST ASTM C478 SPECIFICATIONS IN BOTH MATERIAL & DESIGN.
14. ADDITIONAL WASTEWATER FLOWS SHALL NOT BE MADE TRIBUTARY TO THE LIFT STATION UNTIL A REQUEST FOR A PERMIT MODIFICATION IS SUBMITTED & APPROVED BY NCDEQ-DWQ.
15. PROVIDE PROPERLY SIZED, AUTOMATICALLY ACTUATED DIESEL GENERATOR SET FOR LIFT STATION, WITH A BUILT-IN 12-HOUR FUEL TANK WITH A WEATHER-TIGHT ENCLOSURE. SUBMIT FOR APPROVAL.

SPECIAL REQUIREMENTS

1. GUIDE RAILS SHALL BE 316 STAINLESS STEEL (S.S.).
2. LIFTING CABLE/CHAIN SHALL BE 316 STAINLESS STEEL.
3. DISCHARGE PIPING IN WET WELL SHALL BE SCH 40 PVC CONFORMING TO ASTM D1785.
4. ALL HARDWARE IN WET WELL (BOLTS, ANCHORS, BRACKETS, ETC.) SHALL BE 316 STAINLESS STEEL.
5. ALUMINUM ACCESS DOORS SHALL HAVE STAINLESS STEEL HARDWARE.
6. PRECAST CONCRETE SHALL BE 4,000 PSI MINIMUM.
   ** WET WELL WALL THICKNESS SHALL BE 8 INCHES. MIN.
   ** WET WELL BASE THICKNESS SHALL BE 8 INCHES. MIN.
   THE INTERIOR OF THE WET WELL SHALL RECEIVE TWO COATS OF APPROVED COATING.

PUMP AND MOTOR DATA	
DESIGN FLOW (Q)	126 GPM
TOTAL DYNAMIC HEAD (TDH)	101.6'
RECOMMENDED PUMP OR	KEEN PUMP-KG(X)10
APPROVED EQUAL	IMPELLER DIAMETER=6.3125"
	3600 RPM, 10 HP MIN, 3 PHASE, 60 HZ

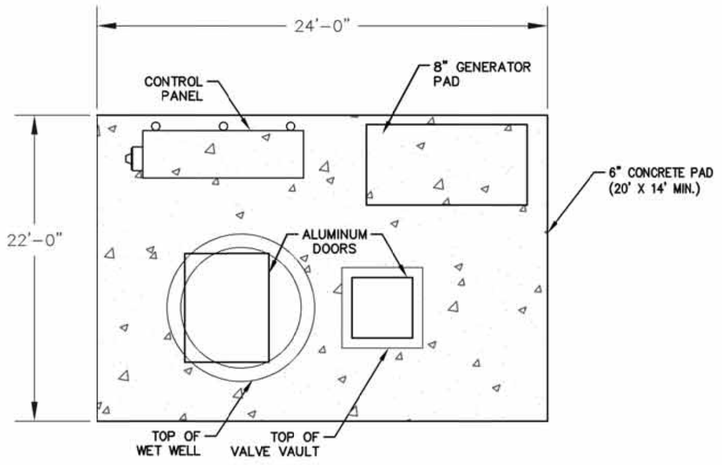

LIFT STATION PLAN VIEW

NOT TO SCALE

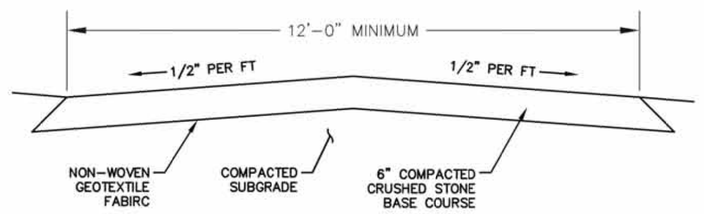

ALL-WEATHER ACCESS ROAD

NOT TO SCALE

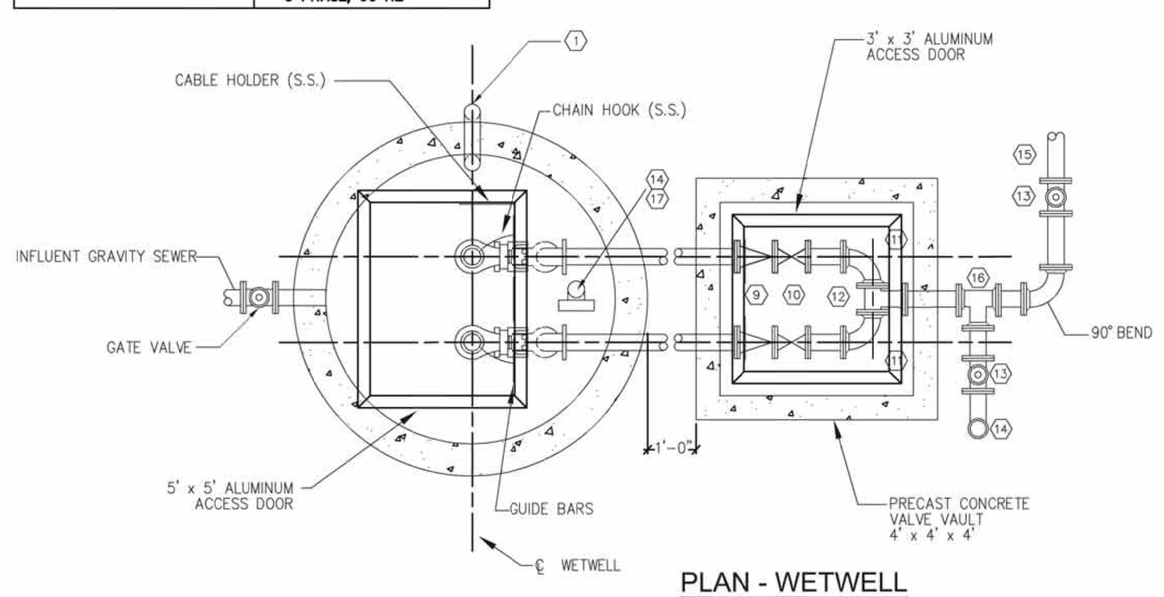

PLAN - WETWELL

NOT TO SCALE

NOTES:

1) CONTRACTOR SHALL INSTALL ELECTRIC METER BASE IN ACCORDANCE WITH THE COUNTY'S ELECTRICAL DEPARTMENT.
2) CONSTRUCT 8'X6'X6" THICK CONCRETE PAD BELOW ELECTRICAL EQUIPMENT RACK.
3) SCADA SYSTEM SHALL BE ALLEN – BRADLEY MICROLOGIC 1000 OR EQUAL. COORDINATE WITH THE COUNTY'S SCADA REQUIREMENTS.
4) COORDINATE STANDBY GENERATOR PLUG TO MEET THE REQUIREMENTS OF THE COUNTY'S PORTABLE GENERATOR.
5) PROVIDE SCADA TELEMETRY SYSTEM. COORDINATE WITH COUNTY'S REQUIREMENTS.

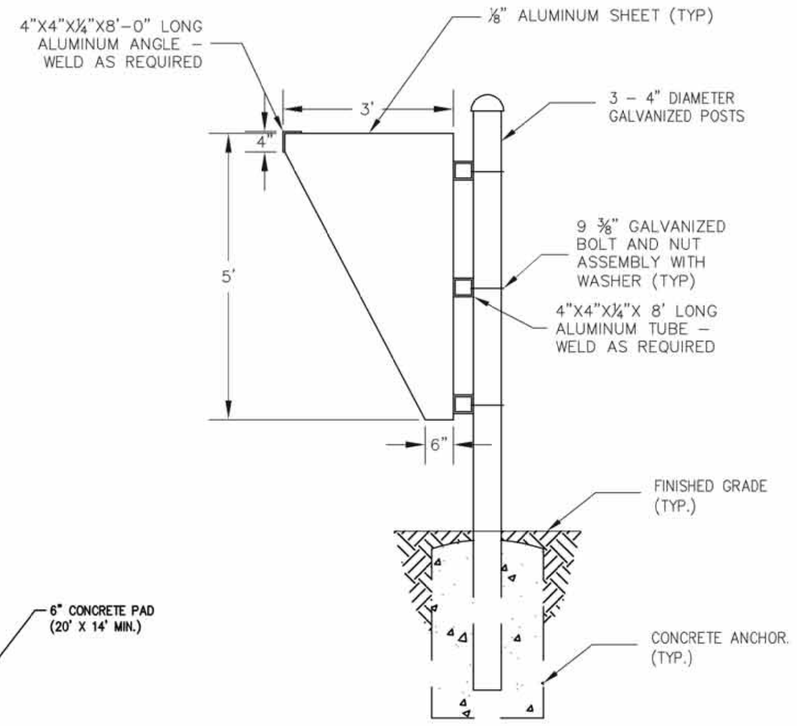

DUPLEX PUMP CONTROLLER NOTES

THE PACKAGE PUMP CONTROL PANEL IS TO INCLUDE THE FOLLOWING EQUIPMENT CONTROLS AND TO BE COMPLETELY WIRED TO ALL ELECTRICAL DEVICES. THE CONTROL PANEL IS TO BE FACTORY WIRED FOR ALL EXTERNAL ELECTRICAL EQUIPMENT AND CONTROLS NECESSARY TO RUN AND CORRECTLY OPERATE THE PUMPS AND PUMPING SYSTEM.

- CIRCUIT BREAKERS FOR EACH PIECE OF ELECTRICAL EQUIPMENT (PUMPS AND CONTROL CIRCUIT, ETC.) TO BE RATED AS PER N.E.C.
- MAGNETIC STARTERS TO HAVE OVERLOAD PROTECTION IN EACH LEG FOR ALL MOTORS AND MOTOR STARTERS. STARTERS TO BE SIZED FOR PUMP MOTORS (MINIMUM SIZE 1).
- MOTOR HEATERS TO BE SIZED FOR MOTOR CAPACITY.
- TRANSFORMERS AS REQUIRED (FOR CONTROL DEVICES).
- RELAYS AND CONTROL DEVICES NECESSARY FOR AUTOMATIC OPERATION OF THE PUMPING STATION.
- LEAK DETECTORS FOR EACH PUMP.
- ALTERNATOR FOR AUTOMATICALLY ALTERNATING PUMP CONTROL OF "LEAD" AND "LAG" PUMPS.
- TIME SWITCHES AND/OR RELAYS NECESSARY TO INSURE THAT ONLY ONE PUMP STARTS AT A TIME.
- FUSED CONTROL CIRCUITS.
- THERMAL PROTECTION ON PUMPS.
- ELAPSE TIME METERS FOR EACH PUMP.
- HIGHWATER ALARM LIGHT WITH HORN AND BATTERY BACKUP.
- ALL MOTOR POWER CABLES AND CONTROL CABLES TO BE RUN CONTINUOUS (WITHOUT SPLICES) FROM MOTOR AND PUMP TO MOTOR CONTROL PANEL.

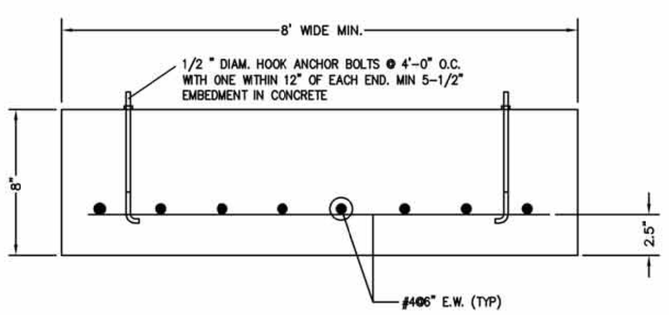

GENERATOR PAD DETAIL

NOT TO SCALE

COMPONENT INDEX

1. 4" PVC VENT PIPE W/ BRASS SCREEN
2. LIQUID LEVEL SENSORS
3. SUBMERSIBLE GRINDER PUMP (2) CAPACITY = 126 gpm TDH = 101.6 FT WATER KEEN PUMP KG(X)10 3600 RPM 10 HP MIN OR APPROVED EQUAL
4. 3" DISCHARGE CONNECTION WITH 3"X4" REDUCER
5. 4" BITUMASTIC-COATED D.I. PIPE
6. 4" 90° BEND D.I.
7. GUIDE BAR (S.S.)
8. 2" PVC DRAIN W/ TRAP
9. 4" SWING CHECK VALVE
10. 4" GATE VALVE
11. 4" 90° BEND D.I.
12. 4" TEE D.I.
13. 4" GATE VALVE IN VALVE BOX
14. 4" ABOVE GRADE QUICK DISCONNECT
15. 4" FORCE MAIN
16. 4" TEE D.I.
17. 4" DIP EMERGENCY PUMP OUT WITH CAST IRON SLUDGE SHOE

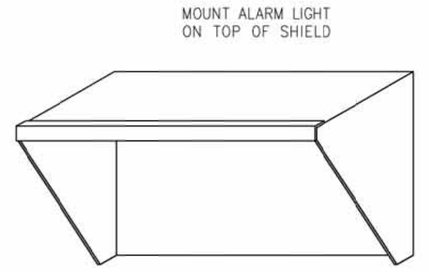

ISOMETRIC HOOD VIEW

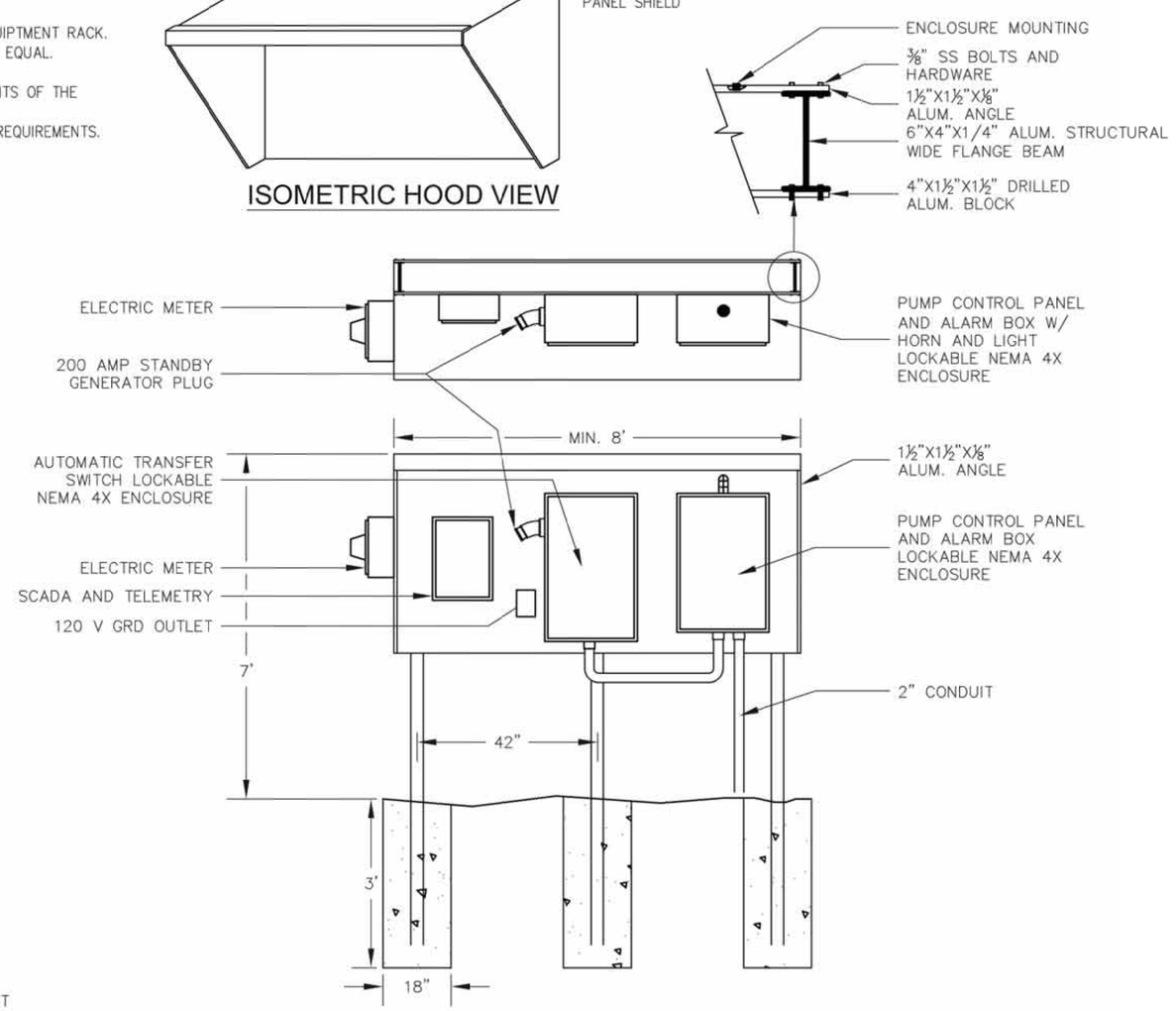

ELECTRICAL EQUIPTMENT RACK

NOT TO SCALE

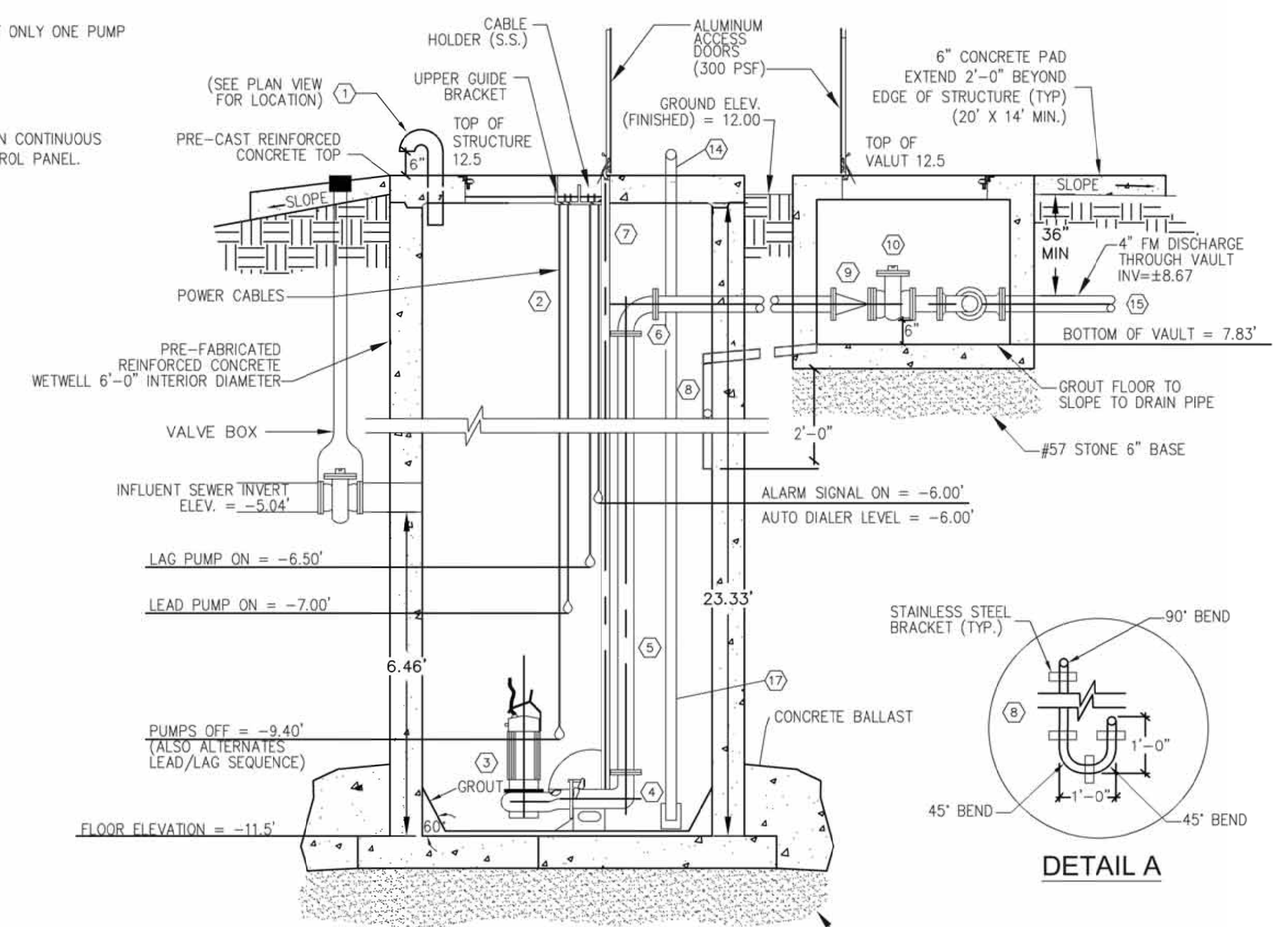

TYPICAL SECTION - WETWELL

NOT TO SCALE

DETAIL A

MSA, P.C.
Environmental Sciences • Planning • Surveying
Civil & Environmental Engineering • Landscape Architecture
5033 Rouse Drive, Virginia Beach, VA 23462
757-490-9264 (Ofc) 757-490-0634 (Fax)
www.msaonline.com

NORTH CAROLINA PROFESSIONAL ENGINEER SEAL 037261 CHRISTOPHER A. SCOTT 09/22/16

DESIGNED	CJL
DRAWN	CJL
CHECKED	CSA
APPROVED	CSA
DATE	09/22/16

NO.	DATE	BY	REVISION DESCRIPTION

THIS DOCUMENT IS THE SOLE PROPERTY OF MSA, P.C., WHERE LEGAL IN THE APPROPRIATION OF ANY DETAIL OR DESIGN IN THIS DOCUMENT BY ANY PERSON OR ENTITY FOR ANY PURPOSE WHATSOEVER WITHOUT THE EXPRESS WRITTEN CONSENT OF MSA, P.C. IS STRICTLY PROHIBITED AND ANY USE OF THIS DOCUMENT BY ANY PERSON OR ENTITY WITHOUT THE EXPRESS WRITTEN CONSENT OF MSA, P.C. SHALL BE AT THE SOLE RISK OF SAID PERSON OR ENTITY AND ANY LIABILITY RESULTING THEREFROM SHALL BE THE RESPONSIBILITY OF SUCH PERSON OR ENTITY.

PUMP STATION NOTES AND DETAILS
of
COUNTRYSIDE ESTATES SINGLE-FAMILY SUBDIVISION
GPIN 8022-39-7183
(MB 21, PG 85, CHES., VA)
MOYOCK TOWNSHIP — CURRITUCK COUNTY, NC

SHEET C7.5
33 of 43 Sheets

SCALE: AS SHOWN

PROJ. NO.: 15021

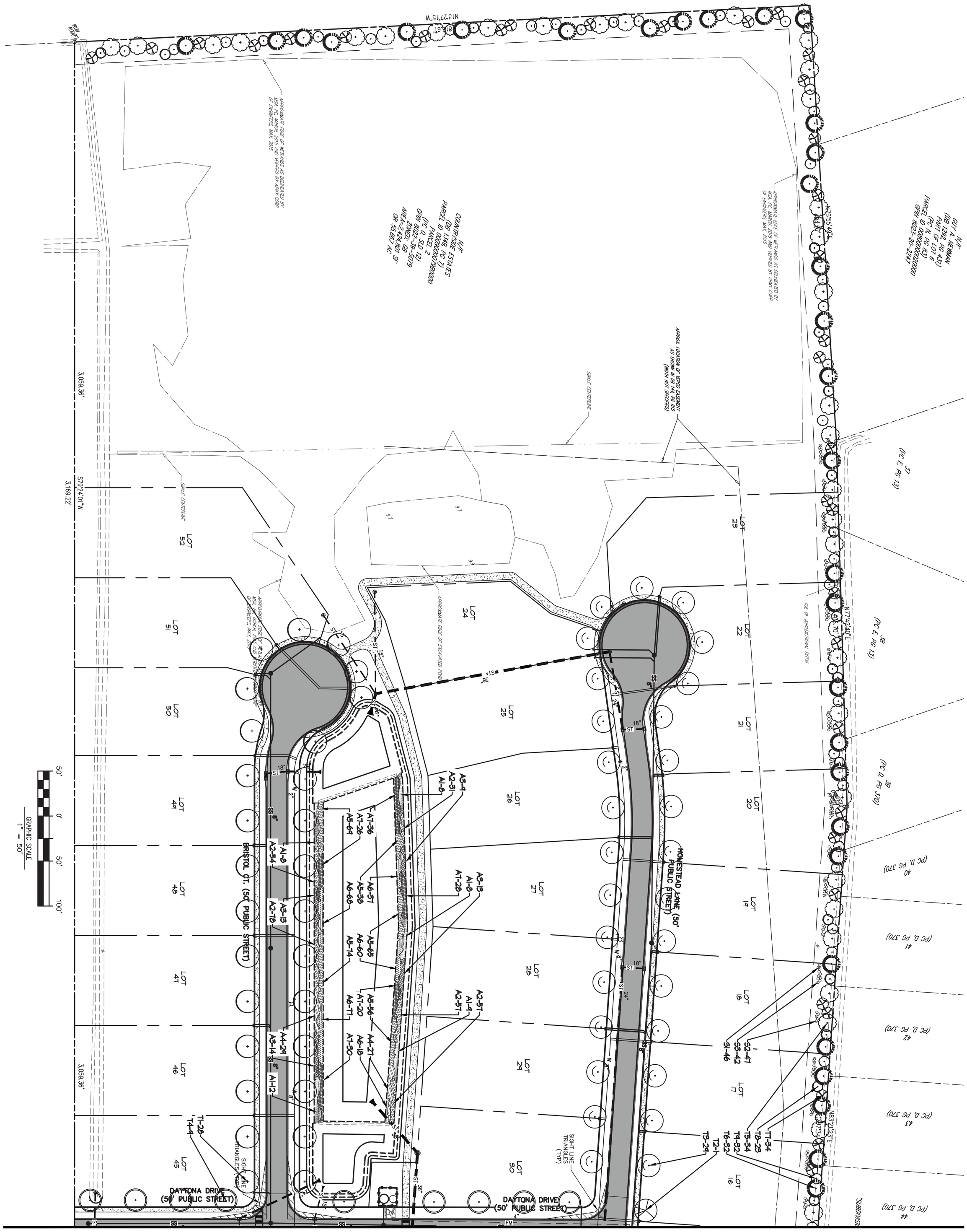

MATCHLINE - SEE SHEET L1.2

NORTH MERIDIAN BASED ON NORTH CAROLINA STATE GRID, NAD '83

PROJ. NO.: 15021

SCALE: 1"=50'

SHEET L1.1 34 of 43 Sheets

LANDSCAPE PLAN
of
COUNTRYSIDE ESTATES SINGLE-FAMILY SUBDIVISION
GPIN 8022-39-7183
(MB 21, PG 85, CHES., VA)
MOYOCK TOWNSHIP — CURRITUCK COUNTY, NC

REV. NO.	REV. BY	REVISION DESCRIPTION	REVISION DATE

THIS DOCUMENT IS THE SOLE PROPERTY OF MSA, P.C., VIRGINIA BEACH, VA. THE MODIFICATION OF ANY DETAIL OR DESIGN OR USE FOR ANY PURPOSE OTHER THAN THAT INTENDED BY MSA, P.C. MAY NOT BE MADE WITHOUT THE EXPRESS WRITTEN CONSENT OF MSA, P.C.

DESIGNED	JMT
DRAWN	JMT
CHECKED	JMT
APPROVED	NAL
DATE	9/22/16

NORTH CAROLINA REGISTERED LANDSCAPE ARCHITECT 1855 NATHAN A. LAHEY 09/22/16

MSA, P.C.
Environmental Sciences • Planning • Surveying
Civil & Environmental Engineering • Landscape Architecture
5033 Rouse Drive, Virginia Beach, VA 23462
757-490-9264 (Ofc) 757-490-0634 (Fax)
www.msaonline.com

MATCHLINE
SEE SHEET L1.1

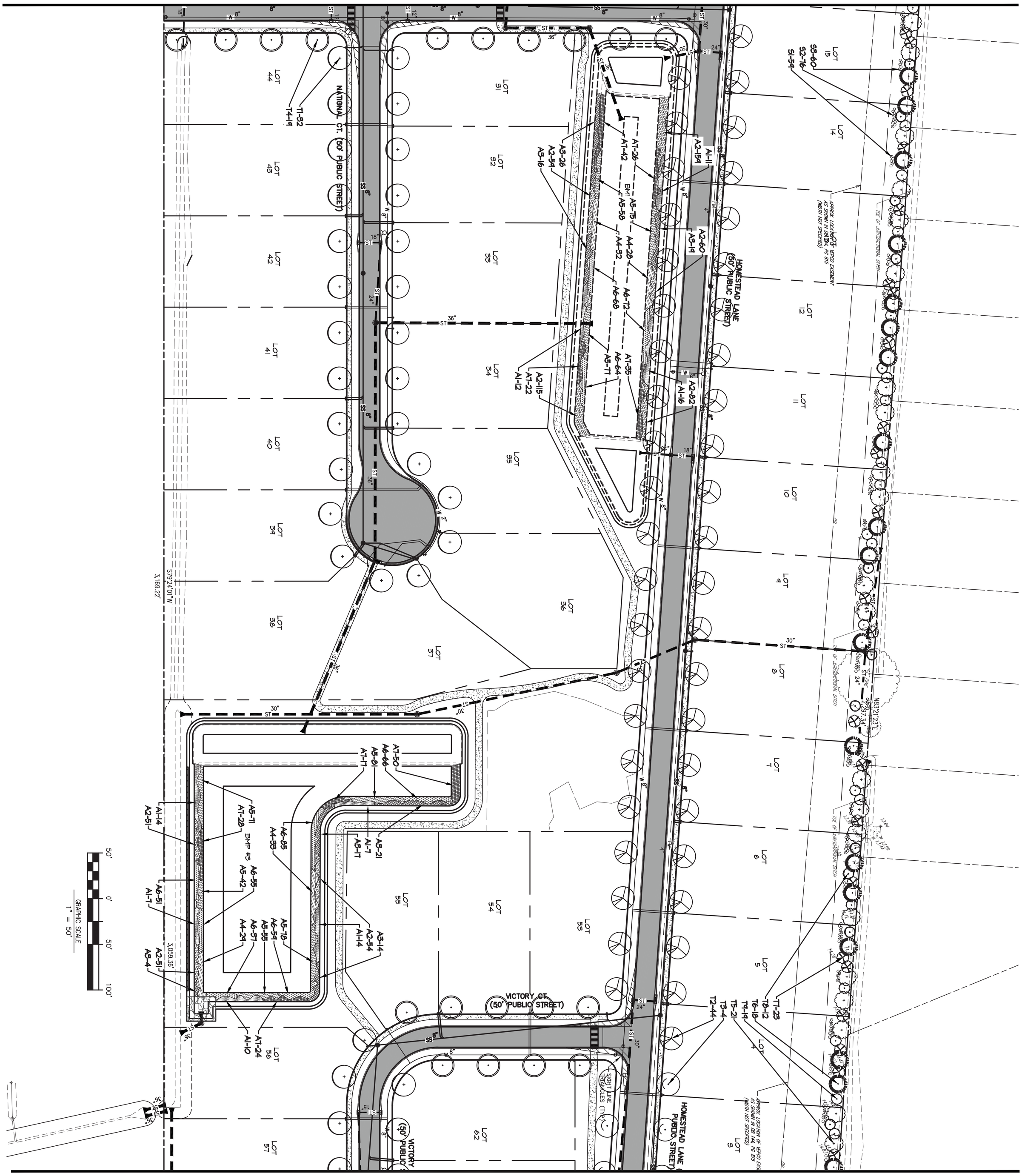

MATCHLINE
SEE SHEET L1.3

NORTH MERIDIAN BASED ON NORTH CAROLINA STATE GRID, NAD '83

PROJ. NO.: 15021
SCALE: 1"=50'
SHEET L1.2 35 of 43 Sheets

LANDSCAPE PLAN
of
COUNTRYSIDE ESTATES SINGLE-FAMILY SUBDIVISION
GPIN 8022-39-7183
(MB 21, PG 85, CHES., VA)
MOYOCK TOWNSHIP — CURRITUCK COUNTY, NC

REV. NO.	REV. BY	REVISION DESCRIPTION	REVISION DATE

THIS DOCUMENT IS THE SOLE PROPERTY OF MSA, P.C., VIRGINIA BEACH, VA. THE MODIFICATION OF ANY DETAIL OR DESIGN OR USE FOR ANY PURPOSE OTHER THAN THAT INTENDED BY MSA, P.C. MAY NOT BE MADE WITHOUT THE EXPRESS WRITTEN CONSENT OF MSA, P.C.

DESIGNED JMT
DRAWN JMT
CHECKED JMT
APPROVED NAL
DATE 9/22/16

NORTH CAROLINA REGISTERED LANDSCAPE ARCHITECT 1855 NATHAN A. LAHY 09/22/16

MSA, P.C.
Environmental Sciences • Planning • Surveying
Civil & Environmental Engineering • Landscape Architecture
5033 Rouse Drive, Virginia Beach, VA 23462
757-490-9264 (Ofc) 757-490-0634 (Fax)
www.msaonline.com

MATCHLINE - SEE SHEET L1.2

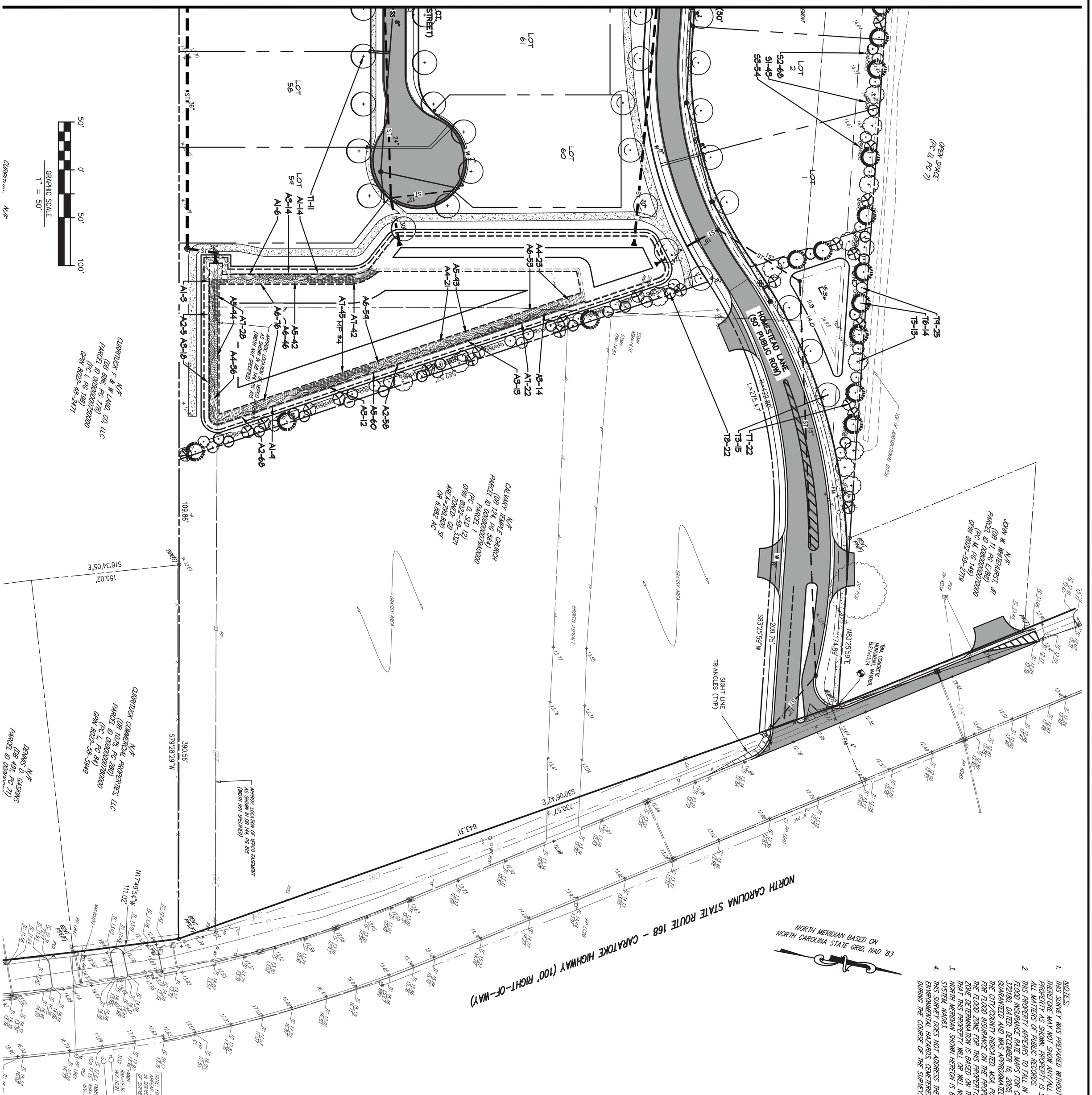

NOTES:

1. THIS SURVEY WAS PREPARED WITHOUT THE BENEFIT OF A CURRENT TITLE REPORT AND THEREFORE MAY NOT SHOW ANY/ALL EASEMENTS OR RESTRICTIONS THAT MAY AFFECT THE PROPERTY AS SHOWN. PROPERTY IS SUBJECT TO RIGHTS-OF-WAY, EASEMENTS, COVENANTS AND ALL MATTERS OF PUBLIC RECORDS.
2. THIS PROPERTY APPEARS TO FALL IN FLOOD ZONE "X" AS SHOWN ON PANEL 22000 OF THE FLOOD INSURANCE RATE MAPS FOR CURRITUCK COUNTY, NORTH CAROLINA, COMMUNITY NO.: 372180, DATED: DECEMBER 16, 2005 FLOOD ZONE INFORMATION SHOWN HEREON IS NOT GUARANTEED AND WAS APPROXIMATELY SCALED FROM THE FLOOD INSURANCE RATE MAPS FOR THE CITY/COUNTY INDICATED. MSA, P.C. IS NOT A PARTY IN DETERMINING THE REQUIREMENTS FOR FLOOD INSURANCE ON THE PROPERTY SHOWN. FOR FURTHER INFORMATION AND TO CONFIRM THE FLOOD ZONE FOR THIS PROPERTY, CONTACT THE LOCAL COMMUNITY FLOOD OFFICIAL. FLOOD ZONE DETERMINATION IS BASED ON THE FLOOD INSURANCE RATE MAPS AND DOES NOT IMPLY THAT THIS PROPERTY WILL OR WILL NOT BE FREE FROM FLOODING OR DAMAGE.
3. NORTH MERIDIAN SHOWN HEREON IS BASED ON NORTH CAROLINA STATE PLANE COORDINATE SYSTEM, NAD83.
4. THIS SURVEY DOES NOT ADDRESS THE EXISTENCE OR NONEXISTENCE OF WETLANDS, ENVIRONMENTAL HAZARDS, CEMETERIES, OR ANY UNDERGROUND STRUCTURE NOT OBSERVED DURING THE COURSE OF THE SURVEY.

REV. NO.	REV. BY	REVISION DESCRIPTION	REVISION DATE

THIS DOCUMENT IS THE SOLE PROPERTY OF MSA, P.C., VIRGINIA BEACH, VA. THE MODIFICATION OF ANY DETAIL OR DESIGN OR USE FOR ANY PURPOSE OTHER THAN THAT INTENDED BY MSA, P.C. MAY NOT BE MADE WITHOUT THE EXPRESS WRITTEN CONSENT OF MSA, P.C.

DESIGNED JMT
DRAWN JMT
CHECKED JMT
APPROVED NAL
DATE 9/22/16

NORTH CAROLINA REGISTERED LANDSCAPE ARCHITECT 1855 JONATHAN A. LAHTI 09/22/16

LANDSCAPE PLAN
of
COUNTRYSIDE ESTATES SINGLE-FAMILY SUBDIVISION
GPIN 8022-39-7183
(MB 21, PG 85, CHES., VA)
MOYOCK TOWNSHIP — CURRITUCK COUNTY, NC

SHEET L1.3
36 of 43 Sheets
SCALE: 1"=50'
PROJ. NO.: 15021

MSA, P.C.
Environmental Sciences • Planning • Surveying
Civil & Environmental Engineering • Landscape Architecture
5033 Rouse Drive, Virginia Beach, VA 23462
757-490-9264 (Ofc) 757-490-0634 (Fax)
www.msaonline.com

LANDSCAPING SPECIFICATIONS

METHOD OF MEASUREMENT AND BASIS FOR PAYMENT

LANDSCAPING WILL NOT BE MEASURED BUT SHALL INCLUDE ALL STOCK, EXCAVATION, INSTALLATION, TOPSOIL, BACKFILLING, FERTILIZER, WRAPPING, GUYING, MULCH, TESTING, MAINTENANCE, AND GUARANTEES REQUIRED FOR THE COMPLETION OF CONSTRUCTION AS SHOWN. PAYMENT FOR THE WORK SPECIFIED HEREIN SHALL BE INCLUDED IN THE LUMP SUM PRICE BID FOR LANDSCAPE PLANTING.

THE LUMP SUM PRICE SHALL INCLUDE ALL MATERIALS, LABOR, EQUIPMENT, PERMITS, INSPECTION, TESTING, AND SUPERVISION REQUIRED TO PERFORM THE LANDSCAPING WORK.

THE BIDDER SHALL INCLUDE WITH HIS/HER LUMP SUM PRICE HIS/HER ESTIMATE OF THE NATURE AND QUANTITIES OF EACH PHASE OF WORK AND SHALL FURNISH A COMPLETE DETAILED COST BREAKDOWN OF EACH PHASE APPLICABLE IN ARRIVING AT HIS LUMP SUM SUM BID PRICE INCLUDING THOSE NOT LISTED ON THE BID LIST SHEET. THE BIDDER MAY ADD ADDITIONAL ITEMS, WHICH HE/SHE CONSIDERS CONTRIBUTING TO THE SCOPE OF WORK INCLUDED IN HIS LUMP SUM PRICE.

SECTION 1 – TREES, SHRUBS, GROUNDCOVER

PART 1 – GENERAL

THE CONTRACTOR SHALL PROVIDE ALL LABOR, MATERIALS, ETC., NECESSARY TO COMPLETE ALL PLANTING AS SHOWN ON THE DRAWING, AS SPECIFIED HEREIN AND/OR AS REQUIRED BY JOB CONDITIONS. THE WORK IN GENERAL INCLUDES, BUT IS NOT LIMITED TO; (1.) PROVIDE ALL PLANT MATERIAL AS INDICATED, (2.) EXCAVATION OF TREE PITS, (3.) TOPSOIL BACKFILL FOR TREE PITS (4.) FERTILIZING, GUYING, WRAPPING (5.) MAINTENANCE AND GUARANTEE (6.) ALL OTHER ITEMS NECESSARY TO MAKE WORK COMPLETE.

THE OWNER SHALL NOTIFY THE CONTRACTOR WHEN OTHER DIVISIONS OF THE WORK HAVE PROGRESSED SUFFICIENTLY TO COMMENCE WORK OF PLANTING OPERATION. THEREAFTER, PLANTING OPERATIONS SHALL BE CONDUCTED UNDER FAVORABLE WEATHER CONDITIONS DURING THE NEXT SEASON OR SEASONS, WHICH ARE NORMAL FOR SUCH WORK. REMOVAL OF ROCK AND OTHER UNDERGROUND OBSTRUCTIONS, RELOCATION OR CONSTRUCTION, AND PROVISION OF DRAINAGE FOR PLANTING AREAS SHALL BE DONE ONLY AS DIRECTED BY THE OWNER.

NURSERY STOCK SHALL BE FULLY GUARANTEED FOR ONE FULL YEAR AFTER OWNER HAS ISSUED ACCEPTANCE. ALL PLANTS THAT FAIL TO MAKE NEW GROWTH FROM A DORMANT CONDITIONS OR THAT DIE DURING THE FIRST YEAR AFTER PLANTING, SHALL BE REPLACED. ALL REPLACEMENTS SHALL CONFORM TO THE ORIGINAL SPECIFICATIONS AS TO SIZE AND TYPE. ALL GUARANTEES ARE PREDICATED ON THE ASSURANCE THAT THE OWNER HAS PROPERLY CARED FOR ALL PLANTS AFTER THE CONTRACTOR HAS BEEN RELEASED FROM HIS/HER MAINTENANCE OBLIGATIONS. IN THE EVENT THAT A DIFFERENCE OF OPINION SHALL ARISE OVER THE REPLACEMENT OF ANY PLANT, THE DECISION OF THE LANDSCAPE ARCHITECT SHALL BE FINAL. ALL COSTS OF REPLACEMENTS SHALL BE BORNE BY THE CONTRACTOR.

PART 2– PRODUCTS

– THE CONTRACTOR SHALL SUPPLY NECESSARY QUANTITIES OF TOPSOIL. THE CONTRACTOR MAY USE TOPSOIL AFTER SECURING THE SOIL TEST (V.P.I.) AND APPLYING RECOMMENDED TREATMENT. TOPSOIL SHALL BE FRIABLE, FERTILE, FINE LOAM OF OTHER CHARACTERIZATIONS TYPICAL OF TOPSOIL OF LOCALITY, FREE OF NOXIOUS WEEDS, STONES LARGER THAN ON HALF INCH, AND ALL OTHER DELETERIOUS MATERIAL.

– FERTILIZER SHALL BE 10–10–10 FORMULA, OF A RECOGNIZED MANUFACTURER OF COMMERCIAL FERTILIZER AND SHALL CONFORM TO THE APPLICABLE STATE AND LOCAL FERTILIZER LAWS. IT SHALL BE UNIFORM IN COMPOSITION, DRY AND FREE FLOWING SHALL NOT BE STORED IN DIRECT CONTACT WITH THE GROUND AND SHALL BE DELIVERED TO THE SITE IN THE ORIGINAL, UNOPENED CONTAINERS, BEARING THE MANUFACTURER'S GUARANTEED ANALYSIS. AZALEA & CAMELLIA FERTILIZER SHALL BE "AZALEA AND CAMELLIA SPECIAL; OF A RECOGNIZED MANUFACTURER.

– STAKES FOR SUPPORTING TREES SHALL BE 2X2 INCH SQUARE BY 8 FEET LONG AND SHALL BE TREATED, SOUND WOOD, OR METAL RIBBED–BACK STAKES. WIRE FOR FASTENING TREES TO STAKES SHALL BE 12–GAUGE PLIABLE GALVANIZED IRON. HOSE TO ENCASE THE GUY WIRES OR WIRES USED FOR FASTENING TREES TO STAKES SHALL BE NEW OR USED 2–PLY REINFORCED RUBBER GARDEN HOSE.

– PEAT MOSS SHALL BE BROWN, WITH AN ACID REACTION 5 ½ TO 7 PH; LOW IN CONTENT OF WOODY MATERIAL AND FREE OF MATERIAL MATTER HARMFUL TO PLANT LIFE; WATER ABSORBING CAPACITY SHALL BE 100 TO 200 PERCENT.

– THE CONTRACTOR SHALL MAKE, AT HIS/HER EXPENSE, WHATEVER ARRANGEMENT MAY BE NECESSARY TO ENSURE AN ADEQUATE SUPPLY OF WATER TO MEET THE NEEDS OF THIS CONTRACT.

– MULCH SHALL BE CLEAN COARSE SHREDDED HARDWOOD MULCH OF APPROVED KIND AS GENERALLY AVAILABLE AT LOCAL MARKETS, APPLIED AT A MINIMUM OF 3 INCHES IN DEPTH OVER ALL BEDS, SHRUBS AND TREE PLANTINGS, EXCEPT THAT WHERE SLOPE INDICATE LIKELIHOOD OF WASH, CLEAN BALED WHEAT STRAW SHALL BE USED. AT DRAINAGE DISPERSION POINTS OR ALONG NATURAL WATERWAYS WHERE CONCENTRATION OF SURFACE WATER EMPTY FROM CULVERT OR PAVED DITCH, SOIL SAVER OR OTHER HEAVY JUTE MESS SHALL BE INSTALLED IN APPROVED MANNER AND TO SUCH EXTENT AS WILL PREVENT EROSION. ALL AZALEA AND CAMELLIA PLANTING BEDS SHALL REQUIRE ONE INCH OF PINE STRAW MULCH UNDER THE 3 INCHES OF BARK MULCH.

– THE NAMES OF PLANTS REQUIRED UNDER THIS CONTRACT CONFORM TO THOSE GIVEN IN STANDARDIZED PLANT NAMES, 1942 EDITION, PREPARED BY THE AMERICAN JOINT COMMITTEE ON HORTICULTURAL NOMENCLATURE, NAMES OF VARIETIES NOT INCLUDED THEREIN CONFORM GENERALLY WITH NAMES ACCEPTED IN THE NURSERY TRADE. PLANTS SHALL HAVE A HABIT OF GROWTH THAT IS NORMAL FOR THE SPECIES AND SHALL BE SOUND, HEALTHY, AND VIGOROUS, WITH WELL DEVELOPED ROOT SYSTEMS, FREE FROM INSECT PESTS, PLANT DISEASES AND INJURIES. ALL PLANTS SHALL EQUAL OR EXCEED THE MEASUREMENTS SPECIFIED IN THE PLANT LIST, WHICH ARE MINIMUM ACCEPTABLE SIZES. TREES SHALL HAVE SINGLE TRUNKS EXCEPT AS NOTED. ANY NECESSARY PRUNING SHALL BE DONE AT TIME OF PLANTING, HOWEVER, NO PLANT SUPPLIED UNDER THIS CONTRACT SHALL BE PRUNED BACK TO SUCH EXTENT THAT IT NO LONGER MEETS SPECIFICATIONS. REQUIREMENTS FOR THE MEASUREMENT, BRANCHING, GRADING, QUALITY, BALLING, AND BURLAPPING OF PLANS IN THE PLANT LIST GENERALLY FOLLOW THE CODE OF STANDARD CURRENTLY RECOMMENDED BY THE AMERICAN STANDARD FOR NURSERY STOCK. SUBSTITUTIONS WILL BE PERMITTED ONLY UPON SUBMISSION OF PROOF THAT ANY PLANT IS NOT OBTAINABLE AND AUTHORIZATION BY THE OWNER MUST BE OBTAINED. A CHANGE ORDER SHALL BE PROVIDED FOR USE OF THE NEAREST EQUIVALENT OBTAINABLE SIZE OR VARIETY OF PLANT HAVING THE SAME ESSENTIAL CHARACTERISTICS WITH AN EQUITABLE ADJUSTMENT OF CONTRACT PRICE.

– BALLED AND BURLAPPED PLANTS (B&B) SHALL BE DUG WITH FIRM, NATURAL BALLS OF EARTH OF SUFFICIENT DIAMETER AND DEPTH TO ENCOMPASS THE FIBROUS AND FEEDING ROOT SYSTEM NECESSARY FOR FULL RECOVERY OF THE PLANT. BALLS SHALL BE FIRMLY WRAPPED WITH BURLAP OR SIMILAR MATERIAL AND BOUND WITH TWINE OR CORD. ALL PLANTS INJURED OR WITH ROOT BALLS BROKEN DURING PLANTING OPERATIONS WILL BE REJECTED. THE B&B PLANTS THAT CANNOT BE PLANTED IMMEDIATELY ON DELIVERY SHALL BE COVERED WITH MOIST SOIL OR MULCH, OR OTHER PROTECTION FROM DRYING WINDS AND SUN. BARE ROOTED PLANTS (BR) SHALL BE PLANTED OR HEELED IN IMMEDIATELY UPON DELIVERY. ALL PLANTS SHALL BE WATERED AS NECESSARY UNTIL PLANTED.

PART 3 – EXECUTION

NEW PLANTING SHALL BE LOCATED WHERE SHOWN ON THE PLAN EXCEPT WHERE OBSTRUCTIONS BELOW GROUND ARE ENCOUNTERED OR WHERE CHANGES HAVE BEEN MADE, ONLY AFTER APPROVAL BY THE OWNER. REASONABLE CARE SHALL BE EXERCISED TO HAVE PLANTING PITS DUG AND SOIL PREPARED PRIOR TO MOVING PLANTS TO THEIR RESPECTIVE LOCATIONS TO ENSURE THAT THEY WILL NOT BE UNNECESSARILY EXPOSED TO DRYING ELEMENTS OR TO PHYSICAL DAMAGE. DIAMETER OF PITS FOR TREES, SHRUBS, AND VINES SHALL BE AT LEAST TWO TIMES THE DIAMETER OF THE BALL OR SPREAD OR ROOTS.

SOIL USED IN PLANTING SHALL EITHER BE TOPSOIL OR SUITABLE EXISTING SOIL, WHICH SHALL BE THOROUGHLY MIXED WITH ONE–HALF PART PEAT AND ONE HALF PART MANURE TO TWO PARTS OF SOIL. VERY POOR SOIL, GRAVE, HARDPAN, OR OTHER SOIL INJURIOUS TO PLANTS SHALL NOT BE USED. EXCEPT FOR ERICACEOUS PLANTS, VERY ACID OR SOUR SOIL (HAVING A PH OF LESS THAN 6) SHALL BE THOROUGHLY MIXED WITH SUFFICIENT LIME TO PRODUCE A SLIGHTLY ACID REACTION (PH OF 6 TO 6.5.) FOR CAMELLIA PLANTING, SUBSTITUTE AZALEA–CAMELLIA FERTILIZER IN LIEU OF 10–10–10 COMMERCIAL FERTILIZERS.

ALL PLANTS SHALL BE PLANTED UPRIGHT AND FACED TO GIVE THE BEST APPEARANCE OR RELATIONSHIP TO ADJACENT STRUCTURES. NO BURLAP SHALL BE PULLED OUT FROM UNDER BALLS. ROOTS SHALL BE SPREAD IN THEIR NORMAL POSITION. ALL BROKEN OR FRAYED ROOTS SHALL BE CUT OFF CLEANLY. TREES SHALL BE SUPPORTED IMMEDIATELY AFTER PLANTING. ALL TREES SHALL BE STAKED. WIRE SHALL BE ENCASED IN HOSE TO PREVENT DIRECT CONTACT WITH BARK OF THE TREE AND SHALL BE PLACED AROUND THE TRUNK IN SINGLE LOOP. WIRES SHALL BE TIGHTENED AND KEPT TAUT. STAKES SHALL BE EQUALLY SPACED ABOUT EACH TREE AND SHALL BE DRIVEN VERTICALLY INTO THE GROUND TO A DEPTH OF 2 ½ TO 3 FEET IN SUCH MANNER AS NOT TO INJURE THE BALL OR ROOTS.

SHRUB PITS SHALL BE CARRIED TO A DEPTH OF 15 TO 18 INCHES. GROUND COVER SHALL BE PLANTED IN BEDS HAVING A MINIMUM DEPTH OF 6 INCHES. THE PREPARED SOIL USED SHALL BE THOROUGHLY MIXED WITH ONE–THIRD PEAT, WITH 40 LBS. OF FERTILIZER (10–10–10) PER 1000 SQUARE FEET OF BED, AND LIGHTLY COMPACTED. PLANTS SHALL BE EVENLY SPACED AND SET TO FINISHED GRADE LEVEL, AFTER SETTLEMENT. ALL PLANTS SHALL BE MULCHED WITH A MINIMUM OF 3 INCH LAYER OF SHREDDED HARDWOOD MULCH WITHIN TWO DAYS AFTER PLANTING. THIS MULCH SHALL ENTIRELY COVER THE AREA OF THE PLANTING PIT, BED, OR SAUCER AROUND EACH PLANT. AT THE TIME OF PLANTING EACH PLANT AND THE SOIL AROUND IT SHALL BE THOROUGHLY SATURATED WITH WATER AND AS MANY TIMES LATER AS SEASONABLE CONDITIONS REQUIRE UNTIL ACCEPTANCE OF THE WORK. CARE SHOULD BE EXERCISED WHEN WATERING TO AVOID FLOODING OF PLANTS AND BEDS, DISPLACEMENT OF MULCH MATERIAL AND EROSION OF SOIL. AVOID USE OF HIGH–PRESSURE HOSES. AFTER ALL OTHER WORK IS COMPLETE, BARK MULCH SHALL BE SPREAD TO A DEPTH OF 3 INCHES MINIMUM AROUND ALL PLANTING BEDS.

MAINTENANCE SHALL BEGIN IMMEDIATELY AFTER PLANTING. NEW PLANTINGS SHALL BE PROTECTED AND MAINTAINED FOR A PERIOD OF 10 WEEKS AFTER FINAL ACCEPTANCE OF THE WORK BY THE OWNER. MAINTENANCE SHALL INCLUDE WATERING, WEEDING, CULTIVATING, MULCHING, REMOVAL OF DEAD MATERIALS, RESETTING PLANTS TO PROPER GRADES OR UPRIGHT POSITION, RESTORATION OF PLANTING SAUCER, AND OTHER NECESSARY OPERATIONS. PROPER PROTECTION TO EXISTING LAWN AREAS SHALL BE PROVIDED AND ANY DAMAGE RESULTING FROM PLANTING OPERATIONS SHALL BE REPAIRED PROMPTLY. ADEQUATE PROTECTION FOR LAWN AREA AGAINST TRESPASSING DURING PLANTING OPERATIONS AND AGAINST DAMAGE OF ANY KIND SHALL BE PROVIDED. NOTHING IN THESE SPECIFICATIONS IS INTENDED TO RELIEVE THE CONTRACTOR OF HIS/HER RESPONSIBILITY TO REPAIR EXITING LAWN AREAS DAMAGED BY WORKMEN ENGAGED IN THE COMPLETION OF THIS PROJECT.

INSPECTION OF THE WORK TO DETERMINE COMPLETION OF THE CONTRACT EXCLUSIVE OF THE POSSIBLE REPLACEMENT OF PLANTING WILL BE MADE BY THE LANDSCAPE ARCHITECT AT THE CONCLUSION OF THE INSTALLATION PERIOD UPON WRITTEN NOTICE REQUESTING SUCH INSPECTION. CONTRACTOR SHALL SUBMIT REQUEST TO THE OWNER AT LEAST 10 DAYS PRIOR TO THE ANTICIPATED DAY FOR INSPECTION. AFTER INSPECTION, THE CONTRACTOR WILL BE NOTIFIED IN WRITING BY THE OWNER OF ACCEPTANCE OF THE WORK, EXCLUSIVE OF THE POSSIBLE REPLACEMENT OF PLANTS SUBJECT TO GUARANTY; OR, IF THERE ARE ANY DEFICIENCIES, THE CONTACTOR WILL BE NOTIFIED OF THE REQUIREMENTS NECESSARY FOR COMPLETION OF THE WORK.

SECTION 2 – LAWNS

PART 1 – GENERAL

THE CONTRACTOR SHALL PROVIDE ALL LABOR, MATERIALS, ETC. NECESSARY TO COMPLETE ALL SEEDING AND/ OR SODDING AS SHOWN ON THIS DRAWING, AS SPECIFIED HEREIN AND /OR AS REQUIRED BY JOB CONDITIONS. THE WORK IN GENERAL INCLUDES BUT IS NOT LIMITED TO; (1.) SOIL PREPARATION (2.) LAYING SOD AND/ OR SEEDING LAWNS AND OTHER INDICATED AREAS (3.) MULCHING (4.) ALL OTHER ITEMS NECESSARY TO MAKE WORK COMPLETE.

THE CONTRACTOR SHALL NOTIFY OWNER OR REPRESENTATIVE AT LEAST FIVE WORKING DAYS PRIOR TO START OF SEEDING AND/OR SOD OPERATIONS. CONTRACTOR SHALL MAKE EFFORT TO PROTECT EXISTING UTILITIES, EXISTING LAWN, PAVEMENT, AND OTHER FACILITIES FROM DAMAGE CAUSED BY SEEDING AND/OR SOD OPERATIONS. SEEDING AND/OR SOD WORK SHALL BE COMPLETED ONLY AFTER PLANTING AND OTHER WORK AFFECTING GROUND SURFACE HAS BEEN COMPLETED. THE OWNER IS RESPONSIBLE FOR RESTRICTING TRAFFIC FROM LAWN AREAS UPON NOTIFICATION OF COMPLETION OF WORK. THE CONTRACTOR SHALL PROVIDE HOSE AND LAWN WATERING EQUIPMENT AS REQUIRED; HOWEVER, THE OWNER SHALL PROVIDE WATER ON SITE.

PART 2 – PRODUCTS

SEED
– THE CONTRACTOR SHALL PROVIDE FRESH, CLEAN, NEW –CROP SEED COMPLYING WITH TOLERANCE FOR PURITY AND GERMINATION ESTABLISHED BY OFFICIAL SEED ANALYSTS OF NORTH AMERICA. THE SEED TYPE AND RATE SHALL BE VERIFIED WITH LOCAL EXTENSION SERVICE PRIOR TO BEGINNING WORK, AND ADJUSTED AS DEEMED NECESSARY FOR SITE AND CLIMATIC CONDITIONS.

– FERTILIZER SHALL BE GRANULAR, NON–BURNING PRODUCT COMPOSED OF NOT LESS THAN 50% ORGANIC, SLOW ACTING, GUARANTEED ANALYSIS PROFESSIONAL FERTILIZER. STARTER FERTILIZER SHALL CONTAIN 10% NITROGEN, 10% PHOSPHORIC ACID, AND 10% POTASH BY WEIGHT, OR SIMILAR APPROVED COMPOSITION.

–GROUND LIMESTONE SHALL CONTAIN AT LEAST 85% OF TOTAL CARBONATES.

–MULCH USED TO PROTECT SEED SHALL BE CLEAN OAT OR WHEAT STRAW THAT HAS BEEN WELL SEASONED, FREE FROM MATURE SEED BEARING STALKS AND ROOTS OF NOXIOUS WEEDS. THE MULCH SHALL BE FREE OF ROT OR MILDEW.

SOD
–ALL GRASS SOD SHALL BE A NURSERY–GROWN NATIVE MIXTURE THAT IS FREE OF OBJECTIONABLE GRASSY AND BROADLEAF WEEDS. SOD SHALL BE MACHINE CUT AT A UNIFORM SOIL THICKNESS AND INDIVIDUAL PIECES SHALL BE CUT TO THE SUPPLIER STANDARD WIDTH AND LENGTH. BROKEN PADS OR PADS WITH TORN AND UNEVEN ENDS WILL NOT BE ACCEPTED. THE SOD SHALL NOT BE HARVESTED OR TRANSPLANTED WHEN MOISTURE CONTENT IS EXCESSIVELY WET OR DRY AND MAY ADVERSELY AFFECT THE SOD'S SURVIVAL. ALL SOD SHALL BE HARVESTED, DELIVERED, AND TRANSPLANTED WITHIN A 36–HOUR PERIOD UNLESS SUITABLE PRESERVATION METHOD IS APPROVED PRIOR TO DELIVERY.

PART 3– EXECUTION

SEED
FOR AREAS LESS THAN 20,000 SQUARE FEET OR WHERE HYDRO–SEEDING IS IMPRACTICABLE, SOW SEED WITH A SPREADER OR SEEDING MACHINE. DO NOT BROADCAST OR DROP SEED WHEN WIND VELOCITY EXCEEDS 5 MPH. LOOSEN TOPSOIL OF LAWN AREAS, AND REMOVE STONES OVER 1" IN ANY DIMENSION, STICKS, ROOTS, RUBBISH, AND EXTRANEOUS MATTER. APPLY LIMESTONE AT A RATE TO ADJUST PH OF TOPSOIL TO 5.5 – 6.8. DISTRIBUTE LIMESTONE EVENLY BY MACHINE AND INCORPORATE THOROUGHLY INTO TOPSOIL. APPLY FERTILIZER TO INDICATED TURF AREAS AND GRADE LAWN AREAS TO A SMOOTH, FREE–DRAINING, EVEN SURFACE WITH A LOOSE, MODERATELY COARSE TEXTURE. EVENLY DISTRIBUTE SEED BY SOWING EQUAL QUANTITIES IN 2 DIRECTIONS AT RIGHT ANGLES TO EACH OTHER. RAKE SEED LIGHTLY INTO TOP 1/8 INCH OF TOPSOIL AND ROLL LIGHTLY. SEED SHALL BE WATERED IN WITH FINE SPRAY. SEED SHALL BE PROTECTED ON SLOPES GREATER THAN 4:1 WITH BURLAP FABRIC, JUTE EROSION MESH, OR OTHER APPROVED MATERIAL. PLACE STRAW OR FIBER MULCH ON SEEDED AREAS WITHIN 24 HOURS AFTER SEEDING.

MAINTENANCE SHALL BEGIN IMMEDIATELY AFTER PLANTING. NEW LAWNS SHALL BE MAINTAINED FOR TWO WEEKS AFTER FULL GERMINATION. MAINTAIN LAWNS BY WATERING, FERTILIZING, WEEDING, MOWING, TRIMMING, AND OTHER OPERATIONS SUCH AS ROLLING, RE–GRADING, AND REPLANTING AS REQUIRED TO ESTABLISH A SMOOTH LAWN FREE OF ERODED OR BARE AREAS. THE CONTRACTOR SHALL REMOVE FROM SITE ALL EXCESS MATERIALS, DEBRIS, AND EQUIPMENT AND SHALL REPAIR ANY DAMAGE RESULTING FROM SEEDING OPERATIONS.

SOD
THE SURFACE ON WHICH THE SOD IS TO BE LAID SHALL BE FIRM AND FREE FROM FOOTPRINTS OR OTHER DEPRESSIONS. A STRING OR LINE OF BOARDS MAY BE USED AS A GUIDE FOR SETTING THE FIRST LINE OF SOD ACROSS THE AREA. BUTT ENDS AND SIDES OF SOD STRIPS; DO NOT OVERLAP. STAGGER STRIPS TO OFFSET JOINTS IN ADJACENT COURSES. WORK FROM BOARDS TO AVOID DAMAGE TO SUBGRADE OR SOD. TAMP OR ROLL LIGHTLY TO ENSURE CONTACT WITH SUBGRADE. WORK SIFTED SOIL INTO MINOR CRACKS BETWEEN PIECES OF SOD. ANCHOR SOD ON SLOPES WITH WOOD PEGS TO PREVENT SLIPPAGE. WATER THOROUGHLY WITH FINE SPRAY AFTER PLANTING.

MAINTENANCE SHALL BEGIN IMMEDIATELY AFTER PLANTING. MAINTENANCE PERIOD SHALL EXTEND FOR TWO WEEKS OR UNTIL SOD IS WELL ROOTED AND CANNOT BE LIFTED OUT OF PLACE. MAINTAIN LAWNS BY WATERING, FERTILIZING, WEEDING, MOWING, TRIMMING, AND OTHER OPERATIONS SUCH AS ROLLING, RE–GRADING, AND REPLANTING AS REQUIRED TO ESTABLISH A SMOOTH LAWN FREE OF ERODED OR BARE AREAS. THE CONTRACTOR SHALL REMOVE FROM SITE ALL EXCESS MATERIALS, DEBRIS, AND EQUIPMENT AND SHALL REPAIR ANY DAMAGE RESULTING FROM SOD OPERATIONS.

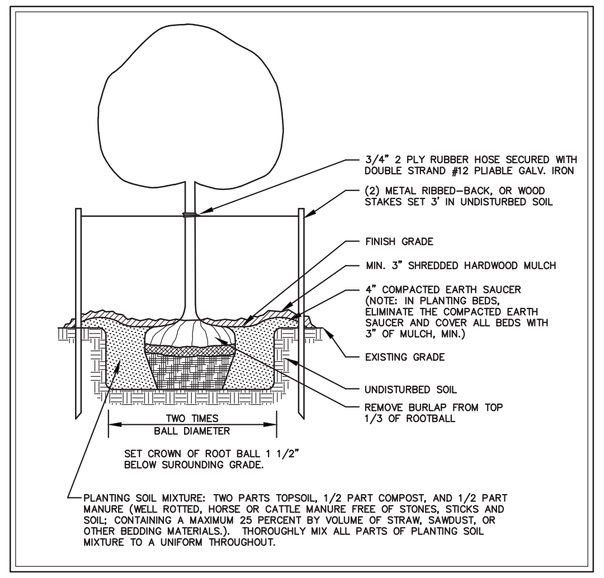

a TREE PLANTING DETAIL
SCALE: NONE

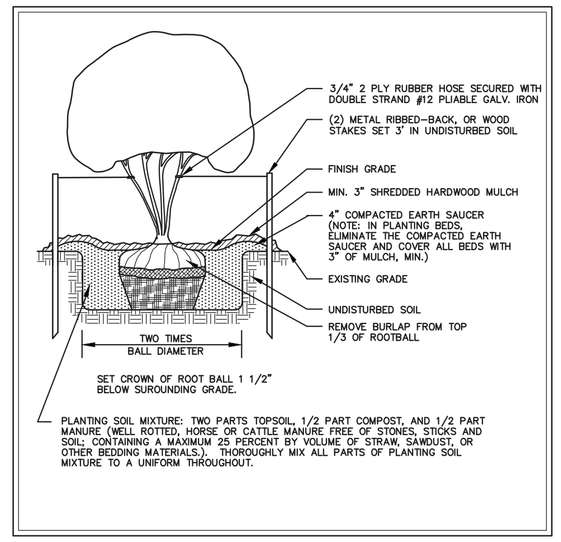

b MULTI–STEM TREE PLANTING DETAIL
SCALE: NONE

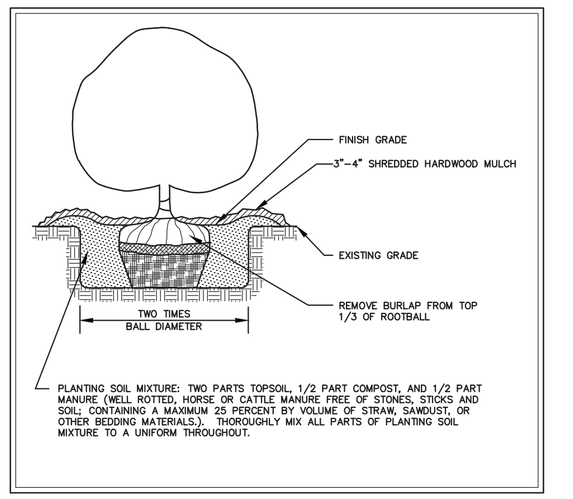

c SHRUB PLANTING DETAIL
SCALE: NONE

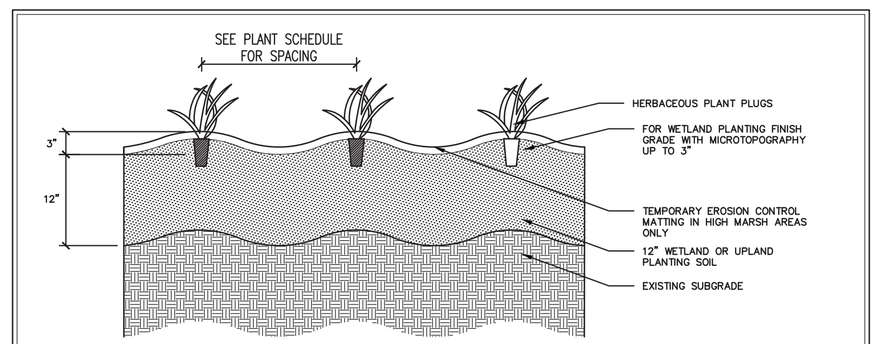

d AQUATIC PLANT PLANTING DETAIL
SCALE: NONE

PROPOSED PLANTING SCHEDULE

KEY	QTY	COMMON NAME	BOTANICAL NAME	CALIPER	HEIGHT	WIDTH	ROOT	SPACE	PLANT MTHD	COMMENTS
T1	71	High Rise Live Oak	Quercus virginiana 'High Rise'	2.5" min.	10'–12' min.	–	B&B	As Shown	a	Full Head, Straight Trunk
T2	45	Shumard Oak	Quercus shumardii	2.5" min.	10'–12' min.	–	B&B	As Shown	a	Full Head, Straight Trunk
T3	48	Skyline Honeylocust	Gleditsia triacanthos 'Skycole'	2.5" min.	10'–12' min.	–	B&B	As Shown	a	Full Head, Straight Trunk
T4	28	Maidenhair Tree	Ginkgo biloba 'Autumn Gold'	2.5" min.	10'–12' min.	–	B&B	As Shown	a	Full Head, Straight Trunk
T5	68	Live Oak	Quercus virginiana	2" min.	8'–10' min.	–	B&B	As Shown	a	Full Head, Straight Trunk
T6	64	Slash Pine	Pinus elliottii	2" min.	8'–10' min.	–	B&B	As Shown	a	Multi–stem, Full, Straight
T7	79	Sweetbay Magnolia	Magnolia virginiana	2" min.	7'–8' min.	–	B&B	As Shown	b	Multi–stem, Full, Straight
T8	57	Eastern Redbud	Cercis canadensis	2" min.	7'–8' min.	–	B&B	As Shown	b	Full Head, Straight Trunk
T9	76	Foster Holly	Ilex x attenuata 'Fosteri'	2" min.	7'–8' min.	–	B&B	As Shown	a	Full Head, Straight Trunk
S1	148	Dwarf Yaupon Holly	Ilex vomitoria 'Nana'	–	18" min.	15" min.	Cont.	3' o.c.	c	Full
S2	191	Arctic Fire Red Twig Dogwood	Cornus stolonifera 'Farrow'	–	24" min.	18" min.	Cont.	3' o.c.	c	Full
S3	156	Silver King Euonymus	Euonymus japonicus 'Silver King'	–	24" min.	18" min.	Cont.	3' o.c.	c	Full
A1	168	Midnight Marvel Hardy Hibiscus	Hibiscus moscheutos 'Midnight Marvel'	–	–	–	Plug	5' o.c.	d	Full
A2	1093	Blue Flag Iris	Iris versicolor	–	–	–	Plug	24" o.c.	d	Full
A3	237	Joe Pye Weed	Eutrochium purpureum	–	–	–	Plug	4' o.c.	d	Full
A4	262	Soft Rush	Juncus effusus	–	–	–	Plug	3' o.c.	d	Full
A5	1128	Green Arrow Arum	Peltandra virginica	–	–	–	Plug	24" o.c.	d	Full
A6	1051	Lizard's Tail	Saururus cernuus	–	–	–	Plug	24" o.c.	d	Full
A7	501	Common Three Square	Scirpus pungens	–	–	–	Plug	3' o.c.	d	Full

MSA, P.C.
Environmental Sciences • Planning • Surveying
Civil & Environmental Engineering • Landscape Architecture
5033 Rouse Drive, Virginia Beach, VA 23462
757-490-9264 (Ofc) 757-490-0634 (Fax)
www.msaonline.com

DESIGNED JMT
DRAWN JMT
CHECKED JMT
APPROVED NAL
DATE 9/22/16

REVISION	DESCRIPTION	REVISION DATE

THIS DOCUMENT IS THE SOLE PROPERTY OF MSA, P.C., VIRGINIA BEACH, VA. THE REPRODUCTION, OR ANY DETAIL OR DESIGN OR USE FOR ANY PURPOSE WHATSOEVER WITHOUT THE EXPRESS WRITTEN CONSENT OF MSA, P.C.

LANDSCAPE NOTES AND DETAILS
of
COUNTRYSIDE ESTATES SINGLE–FAMILY SUBDIVISION
GPIN 8022–39–7183
(MB 21, PG 85, CHES., VA)
MOYOCK TOWNSHIP CURRITUCK COUNTY, NC

SHEET
L2.1
37 of 43 Sheets

SCALE: AS SHOWN
PROJ. NO.: 15021

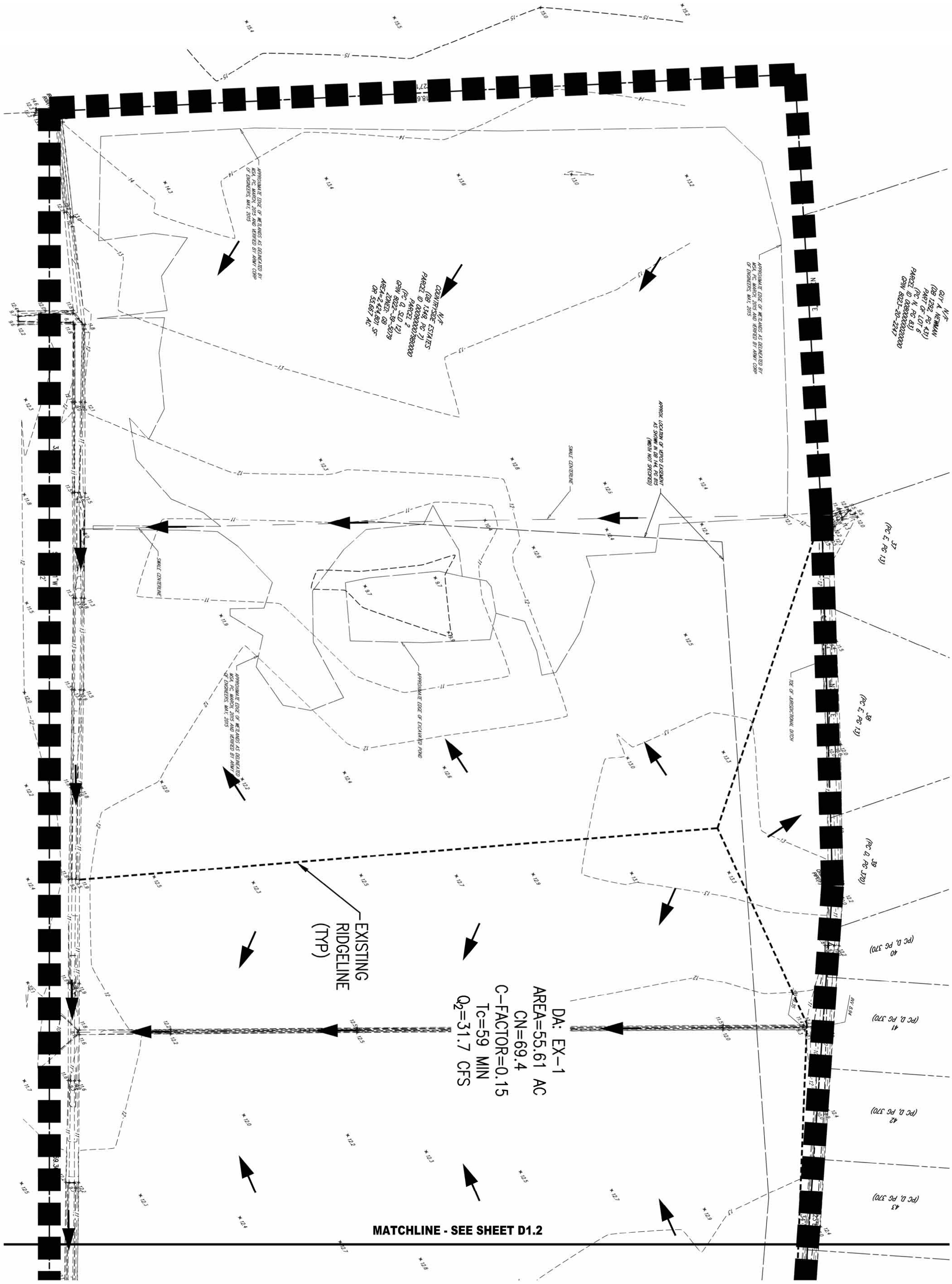

PROJ. NO.: 15021

SCALE: 1"=50'

SHEET D1.1 38 of 43 Sheets

EXISTING DRAINAGE AREA MAP
of
COUNTRYSIDE ESTATES SINGLE-FAMILY SUBDIVISION
GPIN 8022-36-7183
(MB 21, PG 85, CHES., VA)

MOYOCK TOWNSHIP — CURRITUCK COUNTY, NC

REV. NO.	REV. BY	REVISION DESCRIPTION	REVISION DATE

THIS DOCUMENT IS THE SOLE PROPERTY OF MSA, P.C., VIRGINIA BEACH, VA. THE MODIFICATION OF ANY DETAIL OR DESIGN OR USE FOR ANY PURPOSE OTHER THAN THAT INTENDED BY MSA, P.C. MAY NOT BE MADE WITHOUT THE EXPRESS WRITTEN CONSENT OF MSA, P.C.

DESIGNED	CJL
DRAWN	CJL
CHECKED	CSA
APPROVED	CSA
DATE	09/22/16

NORTH CAROLINA PROFESSIONAL SEAL 031728 ENGINEER C. SCOTT ALLEN 09/22/16

MSA, P.C.
Environmental Sciences • Planning • Surveying
Civil & Environmental Engineering • Landscape Architecture
5033 Rouse Drive, Virginia Beach, VA 23462
757-490-9264 (Ofc) 757-490-0634 (Fax)
www.msaonline.com

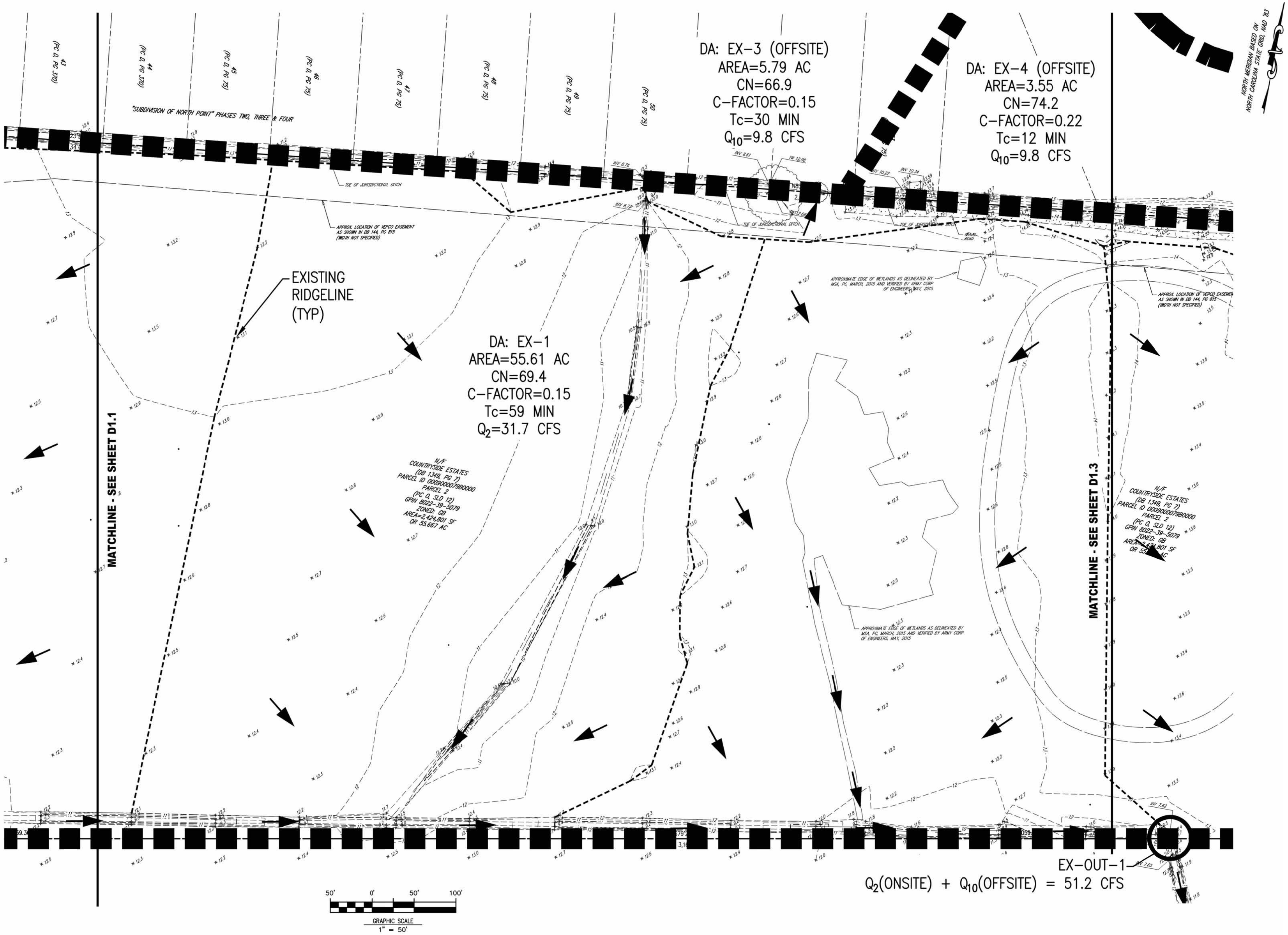

MSA, P.C.
Environmental Sciences • Planning • Surveying
Civil & Environmental Engineering • Landscape Architecture
5033 Rouse Drive, Virginia Beach, VA 23462
757-490-9264 (Ofc) 757-490-0634 (Fax)
www.msaonline.com

NORTH CAROLINA PROFESSIONAL ENGINEER SEAL 031728 09/22/16 SCOTT A. CHEN

DESIGNED	CJL
DRAWN	CJL
CHECKED	CSA
APPROVED	CSA
DATE	09/22/16

REV. NO.	REV. BY	REVISION	DESCRIPTION	REVISION DATE

THIS DOCUMENT IS THE SOLE PROPERTY OF MSA, P.C., VIRGINIA BEACH, VA. THE MODIFICATION OF ANY DETAIL OR DESIGN OR USE FOR ANY PURPOSE OTHER THAN THAT INTENDED BY MSA, P.C. MAY NOT BE MADE WITHOUT THE EXPRESS WRITTEN CONSENT OF MSA, P.C.

EXISTING DRAINAGE AREA MAP
of
COUNTRYSIDE ESTATES SINGLE-FAMILY SUBDIVISION
GPIN 8022-39-7183
(MB 21, PG 85, CHES., VA)
MOYOCK TOWNSHIP
CURRITUCK COUNTY, NC

SHEET
D1.2
39 of 43 Sheets

SCALE: 1"=50'
PROJ. NO.: 15021

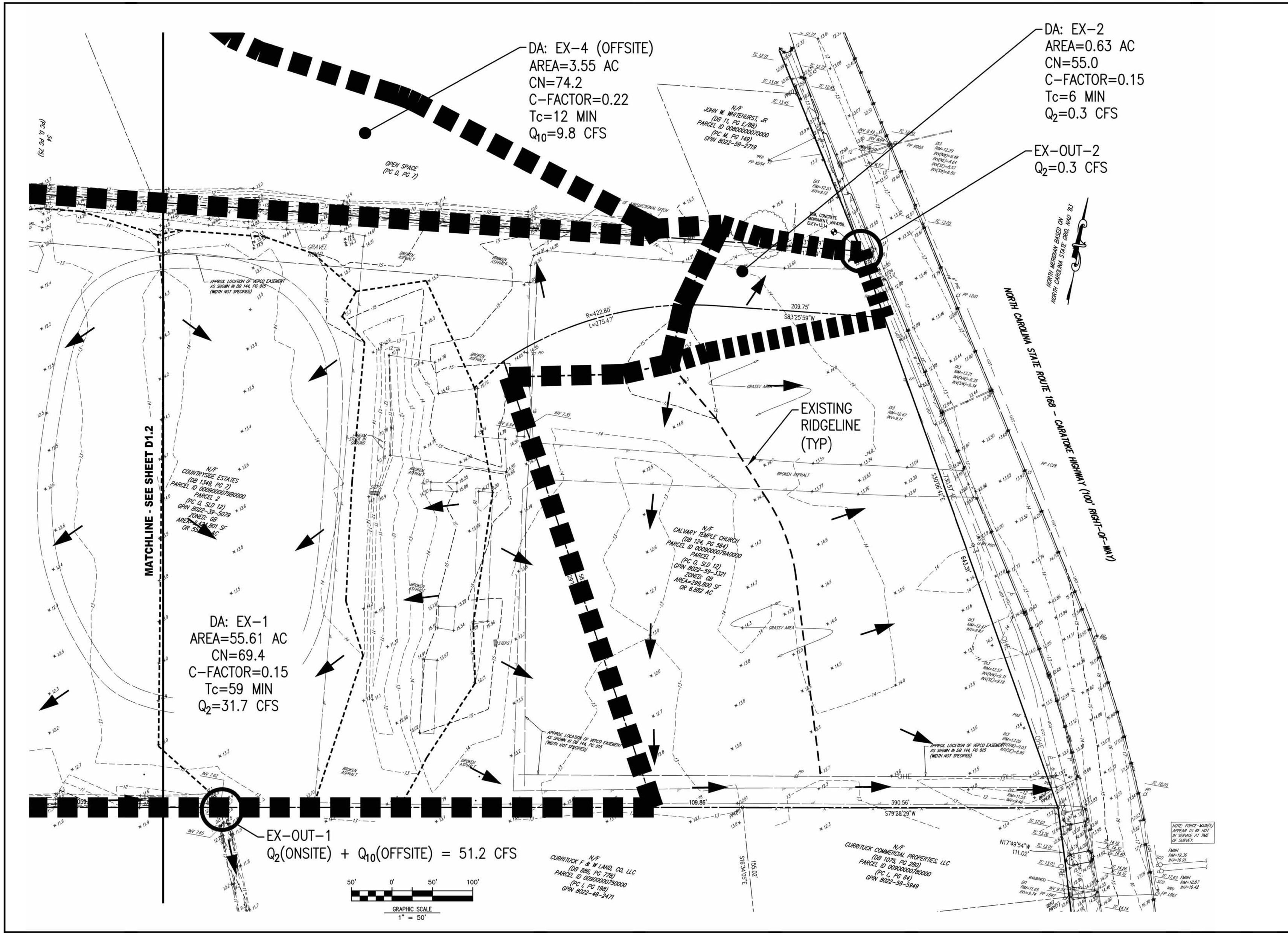

MSA, P.C.
Environmental Sciences • Planning • Surveying
Civil & Environmental Engineering • Landscape Architecture
5033 Rouse Drive, Virginia Beach, VA 23462
757-490-9264 (Ofc) 757-490-0634 (Fax)
www.msaonline.com

NORTH CAROLINA PROFESSIONAL ENGINEER SEAL 031729 09/22/16 C. SCOTT ALBERT

DESIGNED	CJL
DRAWN	CJL
CHECKED	CSA
APPROVED	CSA
DATE	09/22/16

REVISION DATE | REVISION DESCRIPTION | REV. NO. | REV. BY

THIS DOCUMENT IS THE SOLE PROPERTY OF MSA, P.C., VIRGINIA BEACH, VA. THE MODIFICATION OF ANY DETAIL OR DESIGN OR USE FOR ANY PURPOSE OTHER THAN THAT INTENDED BY MSA, P.C. MAY NOT BE MADE WITHOUT THE EXPRESS WRITTEN CONSENT OF MSA, P.C.

EXISTING DRAINAGE AREA MAP
of
COUNTRYSIDE ESTATES SINGLE-FAMILY SUBDIVISION
GPIN 8022-39-7183
(MB 21, PG 85, CHES., VA)
MOYOCK TOWNSHIP
CURRITUCK COUNTY, NC

SHEET
D1.3
40 of 43 Sheets

SCALE: 1"=50'

PROJ. NO.: 15021

DRAINAGE AREAS									
DA#	AREA (AC)	CN	C	Tc (MIN)	DA#	AREA (AC)	CN	C	Tc (MIN)
1	10.74	89.9	0.49	9	5	0.29	73.7	0.28	6
2	9.88	89.2	0.45	8	6	14.14	73.3	0.15	59
3	7.88	90.5	0.52	7	7	1.57	82.5	0.15	6
4	11.74	87.6	0.47	12	8	0.16	89.5	0.72	6

DA: EX-3 (OFFSITE)
Q_{10}(OFFSITE) = 9.8 CFS

NORTH MERIDIAN BASED ON NORTH CAROLINA STATE GRID, NAD 83

APPROXIMATE EDGE OF WETLANDS AS DELINEATED BY MSA, PC, MARCH, 2015 AND VERIFIED BY ARMY CORP OF ENGINEERS, MAY, 2015

APPROX. LOCATION OF VEPCO EASEMENT AS SHOWN IN DB 144, PG 855 (WIDTH NOT SPECIFIED)

SWALE CENTERLINE

N/F
COUNTRYSIDE ESTATES
(DB 1349, PG 7)
PARCEL ID 000900007980000
PARCEL 2
(PC Q, SLD 12)
GPIN 8022-39-5079
ZONED: GB
AREA=2,424,801 SF
OR 55.667 AC

APPROXIMATE EDGE OF EXCAVATED POND

APPROXIMATE EDGE OF WETLANDS AS DELINEATED BY MSA, PC, MARCH, 2015 AND VERIFIED BY ARMY CORP OF ENGINEERS, MAY, 2015

APPROXIMATE EDGE OF WETLANDS AS DELINEATED BY MSA, PC, MARCH, 2015 AND VERIFIED BY ARMY CORP OF ENGINEERS, MAY, 2015

"SUBDIVISION"

N77°24'40"E 406.70'

N83°21'29"E 2,297.34'

LOT 23 | LOT 22 | LOT 21 | LOT 20 | LOT 19 | LOT 18 | LOT 17 | LOT 16

LOT 24 | LOT 25 | LOT 26 | LOT 27 | LOT 28 | LOT 29 | LOT 30 | LOT 31 | LOT 32 | LOT 33 | LOT 34 | LOT 35 | LOT 36 | LOT 37 | LOT 38 | LOT 39 | LOT 40 | LOT 41 | LOT 42 | LOT 43 | LOT 44 | LOT 45

LOT 52 | LOT 51 | LOT 50 | LOT 49 | LOT 48 | LOT 47 | LOT 46

HOMESTEAD LANE (50' PUBLIC STREET)

BRISTOL CT. (50' PUBLIC STREET)

DAYTONA DRIVE (50' PUBLIC STREET)

MATCHLINE - SEE SHEET D2.2

DAYTONA DRIVE (50' PUBLIC STREET)

BMP #1

36" ST

6 | 7 | 1 | 2

50' 0' 50' 100'

GRAPHIC SCALE
1" = 50'

MSA, P.C.
Environmental Sciences • Planning • Surveying
Civil & Environmental Engineering • Landscape Architecture
5033 Rouse Drive, Virginia Beach, VA 23462
757-490-9264 (Ofc) 757-490-0634 (Fax)
www.msaonline.com

NORTH CAROLINA PROFESSIONAL ENGINEER SEAL 037291 09/22/16 CHRISTOPHER A. SCOTT

DESIGNED	CJL
DRAWN	CJL
CHECKED	CSA
APPROVED	CSA
DATE	09/22/16

NO.	REVISION	DESCRIPTION

THIS DOCUMENT IS THE SOLE PROPERTY OF MSA, P.C., VIRGINIA BEACH, VA. THE MODIFICATION OF ANY DETAIL OR DESIGN OR USE FOR ANY PURPOSE OTHER THAN INTENDED BY MSA, P.C. IS AND MUST BE MADE WITHOUT THE EXPRESS WRITTEN CONSENT OF MSA, P.C.

PROPOSED DRAINAGE AREA MAP
of
COUNTRYSIDE ESTATES SINGLE-FAMILY SUBDIVISION
GPIN 8022-39-7183
(MB 21, PG 85, CHES., VA)
MOYOCK TOWNSHIP — CURRITUCK COUNTY, NC

SHEET
D2.1
41 of 43 Sheets

SCALE: 1"=50'

PROJ. NO.: 15021

DA: EX-3 (OFFSITE)
Q_{10}(OFFSITE) = 9.8 CFS

DA: EX-4 (OFFSITE)
Q_{10}(OFFSITE) = 9.8 CFS

DRAINAGE AREAS									
DA#	AREA (AC)	CN	C	Tc (MIN)	DA#	AREA (AC)	CN	C	Tc (MIN)
1	10.74	89.9	0.49	9	5	0.29	73.7	0.28	6
2	9.88	89.2	0.45	8	6	14.14	73.3	0.15	59
3	7.88	90.5	0.52	7	7	1.57	82.5	0.15	6
4	11.74	87.6	0.47	12	8	0.16	89.5	0.72	6

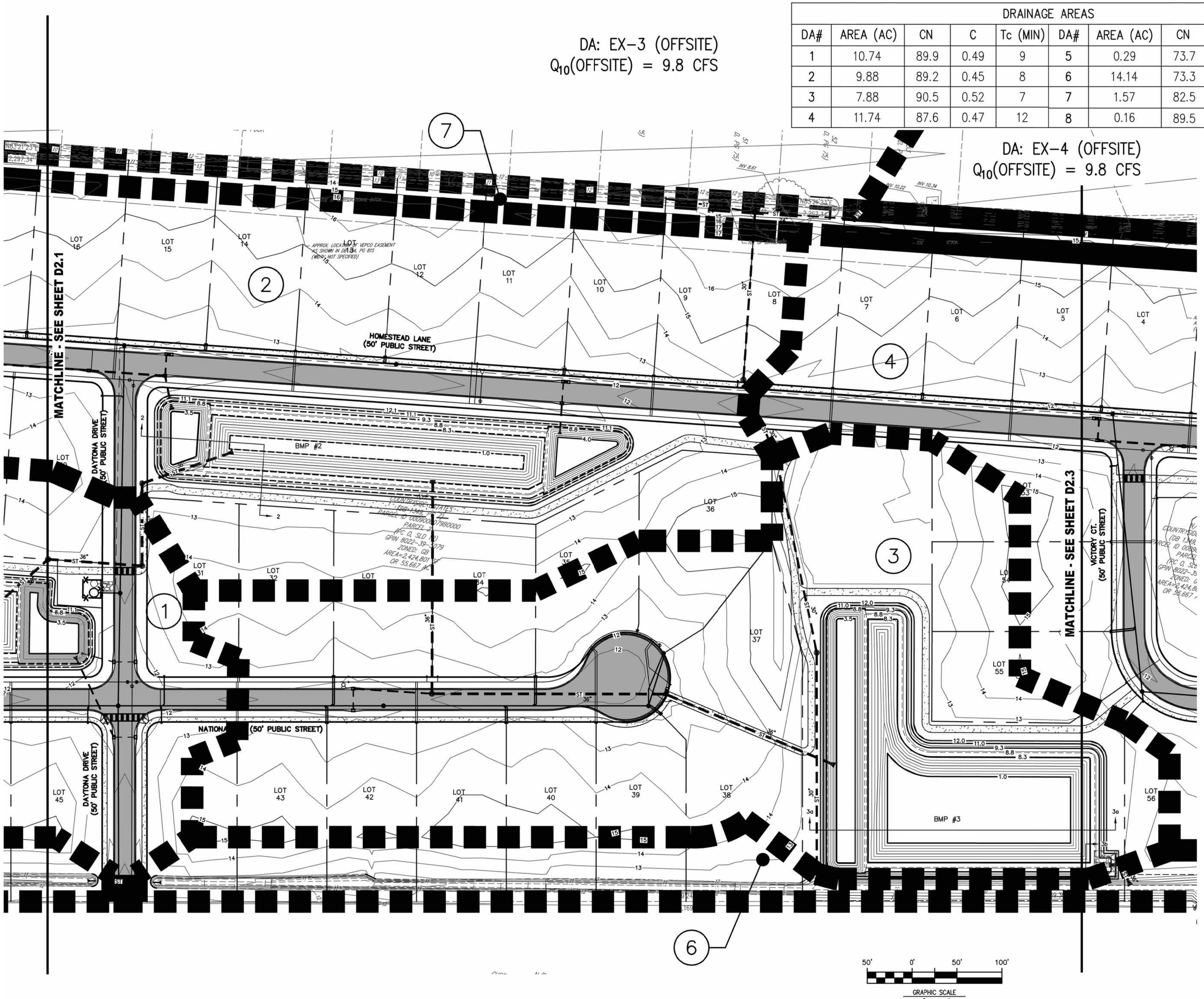

NORTH MERIDIAN BASED ON NORTH CAROLINA STATE GRID, NAD '83

MSA, P.C.
Environmental Sciences • Planning • Surveying
Civil & Environmental Engineering • Landscape Architecture
5033 Rouse Drive, Virginia Beach, VA 23462
757-490-9264 (Ofc) 757-490-0634 (Fax)
www.msaonline.com

NORTH CAROLINA PROFESSIONAL ENGINEER SEAL 037291 09/22/16 CHRISTOPHER A. SCOTT

DESIGNED	CJL
DRAWN	CJL
CHECKED	CSA
APPROVED	CSA
DATE	09/22/16

NO.	REVISIONS	DESCRIPTION

THIS DOCUMENT IS THE SOLE PROPERTY OF MSA, P.C., VIRGINIA BEACH, VA. THE MODIFICATION OF ANY DETAIL OR DESIGN OR USE FOR ANY PURPOSE OTHER THAN THAT INTENDED BY MSA, P.C. WITHOUT THE EXPRESS WRITTEN CONSENT OF MSA, P.C.

PROPOSED DRAINAGE AREA MAP
of
COUNTRYSIDE ESTATES SINGLE-FAMILY SUBDIVISION
GPIN 8022-39-7183
(MB 21, PG 85, CHES., VA)
MOYOCK TOWNSHIP CURRITUCK COUNTY, NC

SHEET
D2.2
42 of 43 Sheets

SCALE: 1"=50'

PROJ. NO.: 15021

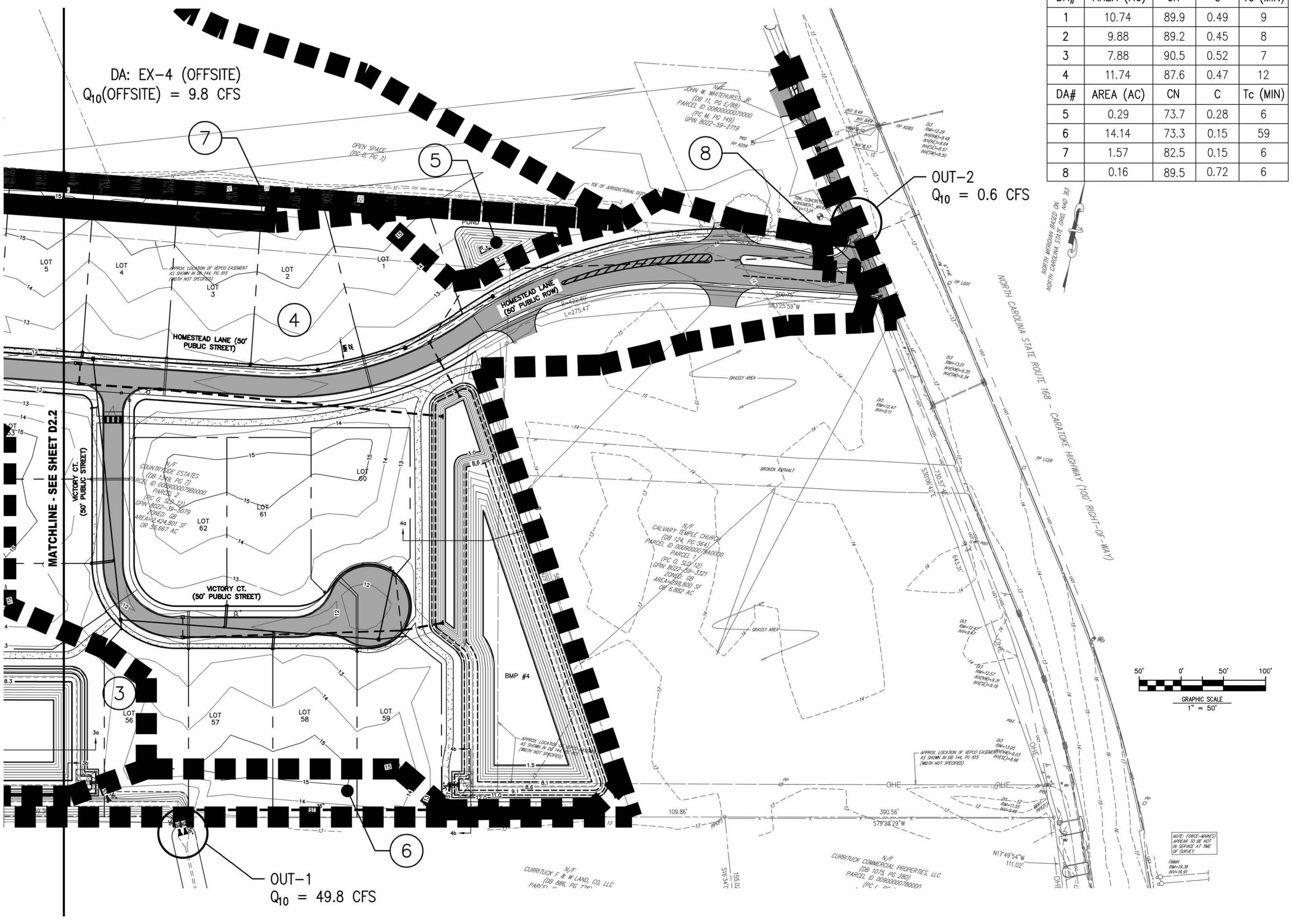

DRAINAGE AREAS				
DA#	AREA (AC)	CN	C	Tc (MIN)
1	10.74	89.9	0.49	9
2	9.88	89.2	0.45	8
3	7.88	90.5	0.52	7
4	11.74	87.6	0.47	12
DA#	AREA (AC)	CN	C	Tc (MIN)
5	0.29	73.7	0.28	6
6	14.14	73.3	0.15	59
7	1.57	82.5	0.15	6
8	0.16	89.5	0.72	6

MSA, P.C.
Environmental Sciences • Planning • Surveying
Civil & Environmental Engineering • Landscape Architecture
5033 Rouse Drive, Virginia Beach, VA 23462
757-490-9264 (Ofc) 757-490-0634 (Fax)
www.msaonline.com

NORTH CAROLINA PROFESSIONAL ENGINEER SEAL 031728 09/22/16 C. SCOTT ALBERT

DESIGNED	CJL
DRAWN	CJL
CHECKED	CSA
APPROVED	CSA
DATE	09/22/16

REV. NO. | REV. BY | REVISION | DESCRIPTION | REVISION DATE

THIS DOCUMENT IS THE SOLE PROPERTY OF MSA, P.C., VIRGINIA BEACH, VA. THE MODIFICATION OF ANY DETAIL OR DESIGN OR USE FOR ANY PURPOSE OTHER THAN THAT INTENDED BY MSA, P.C. MAY NOT BE MADE WITHOUT THE EXPRESS WRITTEN CONSENT OF MSA, P.C.

PROPOSED DRAINAGE AREA MAP
of
COUNTRYSIDE ESTATES SINGLE-FAMILY SUBDIVISION
GPIN 8022-39-7183
(MB 21, PG 85, CHES., VA)

MOYOCK TOWNSHIP
CURRITUCK COUNTY, NC

SHEET
D2.3
43 of 43 Sheets

SCALE: 1"=50'

PROJ. NO.: 15021